INTERNATIONAL STANDARD

ISO 13232-4

Second edition
2005-12-15

Motorcycles — Test and analysis procedures for research evaluation of rider crash protective devices fitted to motorcycles —

Part 4: Variables to be measured, instrumentation and measurement procedures

Motocycles — Méthodes d'essai et d'analyse de l'évaluation par la recherche des dispositifs, montés sur les motocycles, visant à la protection des motocyclistes contre les collisions —

Partie 4: Variables à mesurer, instrumentation et méthodes de mesure

STANDARDSISO.COM : Click to view the full PDF of ISO 13232-4:2005

Reference number
ISO 13232-4:2005(E)

© ISO 2005

PDF disclaimer

This PDF file may contain embedded typefaces. In accordance with Adobe's licensing policy, this file may be printed or viewed but shall not be edited unless the typefaces which are embedded are licensed to and installed on the computer performing the editing. In downloading this file, parties accept therein the responsibility of not infringing Adobe's licensing policy. The ISO Central Secretariat accepts no liability in this area.

Adobe is a trademark of Adobe Systems Incorporated.

Details of the software products used to create this PDF file can be found in the General Info relative to the file; the PDF-creation parameters were optimized for printing. Every care has been taken to ensure that the file is suitable for use by ISO member bodies. In the unlikely event that a problem relating to it is found, please inform the Central Secretariat at the address given below.

STANDARDSISO.COM : Click to view the full PDF of ISO 13232-4:2005

© ISO 2005

All rights reserved. Unless otherwise specified, no part of this publication may be reproduced or utilized in any form or by any means, electronic or mechanical, including photocopying and microfilm, without permission in writing from either ISO at the address below or ISO's member body in the country of the requester.

ISO copyright office
Case postale 56 • CH-1211 Geneva 20
Tel. + 41 22 749 01 11
Fax + 41 22 749 09 47
E-mail copyright@iso.org
Web www.iso.org

Published in Switzerland

 © ISO 2005 – All rights reserved

Contents

Page

Foreword vi

Introduction vii

1 Scope 1

2 Normative references 1

3 Definitions, symbols, and abbreviations 2

4 Requirements 3
4.1 Electronically recorded variables 3
4.2 Mechanically recorded variables 5
4.3 Photographic targets to be digitized 5
4.4 Sensor specifications 7
4.5 Internal data acquisition and recording system specifications 15
4.6 High speed photography 18
4.7 Still photography 19

5 Measurement methods 21
5.1 Pre-test measurements related to data reduction 21
5.2 Data reduction 21
5.3 Impact conditions 28
5.4 Frangible bone continuity sensors 32

6 Documentation 32

Annex A (normative) **Digitizing the helmet centroid point** 35

Annex B (normative) **High speed photography field of view requirements** 36

Annex C (normative) **Computer code for calculation of head linear and angular accelerations** 38

Annex D (informative) **Rationale for ISO 13232-4** 63

Figures

Figure 1a — Nine accelerometer block with accelerometer mounting locations and orientations 8

Figure 1b — Nine accelerometer block with accelerometer mounting locations and orientations 9

Figure 2 — Nine accelerometer block mounting base 10

Figure 3 — Chest potentiometer installation 13

Figure 4 — Frangible bone strain gauge locations 14

Figure 5 — Frangible bone break continuity sensor end-to-end wire pattern 16

Figure 6 — F_Z strain gauge calibration 23

Figure 7 — M_X and M_Y strain gauge calibration 23

Figure 8 — M_Z strain gauge calibration 24

STANDARDSISO.COM : Click to view the full PDF of ISO 13232-4:2005

© ISO 2005 – All rights reserved

Figure 9a — OV contact point determination for OV front, front corner, rear, or rear corner contact with MC front or rear contact 30

Figure 9b — OV contact point determination for OV side contact 31

Figure 9c — OV contact point determination, OV front or rear contact with MC side contact (positive ycp shown) 33

Figure 10 — Frangible bone continuity sensor circuit 34

Figure D.1 — Rotational chest pot and string pot time history responses to impact when mounted in the Hybrid III chest 67

Figure D.2 — Force/deflection properties of example cables 68

Figure D.3 — Simulated effect of one cable catching, on dummy head trajectory 69

Figure D.4 — Simulated effect of one cable catching, on dummy upper torso trajectory 69

Figure D.5 — Simulated effect of one cable catching, on dummy lower torso trajectory 70

Figure D.6 — Simulated effect of one cable catching, on dummy head velocity 70

Figure D.7 — Simulated effect of one cable catching, on dummy head acceleration 71

Figure D.8 — Simulated effect of 12 cables catching, on dummy head trajectory 71

Figure D.9 — Simulated effect of 12 cables catching, on dummy upper torso trajectory 72

Figure D.10 — Simulated effect of 12 cables catching, on dummy lower torso trajectory 72

Figure D.11 — Simulated effect of 12 cables catching, on dummy head velocity 73

Figure D.12 — Simulated effect of 12 cables catching, on dummy head acceleration 73

Figure D.13 — Full-scale impact test time history of the motorcycle at the approximate centre of gravity 75

Figure D.14 — Sample sled test time history of the motorcycle along the longitudinal centre of gravity, rearward of lateral centre line 75

Figure D.15a — Helmet centroid normalized forward velocity versus displacement 78

Figure D.15b — Helmet centroid normalized forward velocity versus displacement 79

Figure D.15c — Helmet centroid normalized forward velocity versus displacement 80

Figure D.15d — Helmet centroid normalized forward velocity versus displacement 81

Tables

Table 1 — Opposing vehicle targets 6

Table 2 — Frangible leg bone strain gauge specifications 11

Table 3 — A to D specifications for digital systems 17

Table 4 — Full-scale recording ranges 18

Table 5 — Required cameras and specifications 20

STANDARDSISO.COM : Click to view the full PDF of ISO 13232-4:2005

© ISO 2005 – All rights reserved

Table 6 — Still photograph minimum focal lengths and field of view widths 21

Table 7 — Motorcyclist anthropometric impact dummy frequency response classes 22

Table 8 — Calibration data for femur strain gauges 25

Table 9 — Calibration data for upper tibia strain gauges 25

Table 10 — Calibration data for lower tibia strain gauges 26

Table B.1 — Photographic specifications for seven impact configurations 37

Table D.1 — Normalized forward velocity of helmet centroid crossing the AA' plane 76

Table D.2 — Normalized resultant velocity of helmet centroid crossing the AA' plane 77

STANDARDSISO.COM : Click to view the full PDF of ISO 13232-4:2005

© ISO 2005 – All rights reserved

Foreword

ISO (the International Organization for Standardization) is a worldwide federation of national standards bodies (ISO member bodies). The work of preparing International Standards is normally carried out through ISO technical committees. Each member body interested in a subject for which a technical committee has been established has the right to be represented on that committee. International organizations, governmental and non-governmental, in liaison with ISO, also take part in the work. ISO collaborates closely with the International Electrotechnical Commission (IEC) on all matters of electrotechnical standardization.

International Standards are drafted in accordance with the rules given in the ISO/IEC Directives, Part 2.

The main task of technical committees is to prepare International Standards. Draft International Standards adopted by the technical committees are circulated to the member bodies for voting. Publication as an International Standard requires approval by at least 75 % of the member bodies casting a vote.

ISO 13232-4 was prepared by Technical Committee ISO/TC 22, *Road vehicles*, Subcommittee SC 22, *Motorcycles*.

This second edition cancels and replaces the first version (ISO 13232-4:1996), which has been technically revised.

ISO 13232 consists of the following parts, under the general title *Motorcycles — Test and analysis procedures for research evaluation of rider crash protective devices fitted to motorcycles*:

— *Part 1: Definitions, symbols and general considerations*

— *Part 2: Definition of impact conditions in relation to accident data*

— *Part 3: Motorcyclist anthropometric impact dummy*

— *Part 4: Variables to be measured, instrumentation and measurement procedures*

— *Part 5: Injury indices and risk/benefit analysis*

— *Part 6: Full-scale impact-test procedures*

— *Part 7: Standardized procedures for performing computer simulations of motorcycle impact tests*

— *Part 8: Documentation and reports*

STANDARDSISO.COM : Click to view the full PDF of ISO 13232-4:2005

© ISO 2005 – All rights reserved

Introduction

ISO 13232 has been prepared on the basis of existing technology. Its purpose is to define common research methods and a means for making an overall evaluation of the effect that devices which are fitted to motorcycles and intended for the crash protection of riders, have on injuries, when assessed over a range of impact conditions which are based on accident data.

It is intended that all of the methods and recommendations contained in ISO 13232 should be used in all basic feasibility research. However, researchers should also consider variations in the specified conditions (for example, rider size) when evaluating the overall feasibility of any protective device. In addition, researchers may wish to vary or extend elements of the methodology in order to research issues which are of particular interest to them. In all such cases which go beyond the basic research, if reference is to be made to ISO 13232, a clear explanation of how the used procedures differ from the basic methodology should be provided.

ISO 13232 was prepared by ISO/TC 22/SC 22 at the request of the United Nations Economic Commission for Europe Group for Road Vehicle General Safety (UN/ECE/TRANS/SCI/WP29/GRSG), based on original working documents submitted by the International Motorcycle Manufacturers Association (IMMA), and comprising eight interrelated parts.

This revision of ISO 13232 incorporates extensive technical amendments throughout all the parts, resulting from extensive experience with the standard and the development of improved research methods.

In order to apply ISO 13232 properly, it is strongly recommended that all eight parts be used together, particularly if the results are to be published.

STANDARDSISO.COM : Click to view the full PDF of ISO 13232-4:2005

© ISO 2005 – All rights reserved

STANDARDSISO.COM : Click to view the full PDF of ISO 13232-4:2005

Motorcycles — Test and analysis procedures for research evaluation of rider crash protective devices fitted to motorcycles —

Part 4: Variables to be measured, instrumentation and measurement procedures

STANDARDSISO.COM : Click to view the full PDF of ISO 13232-4:2005

1 Scope

This part of ISO 13232 specifies requirements for the:

— repeatability and reproducibility of the dynamic measurement procedures for the motorcycle, the opposing vehicle, and the dummy; and

— dummy instrumentation.

ISO 13232 specifies the minimum requirements for research into the feasibility of protective devices fitted to motorcycles, which are intended to protect the rider in the event of a collision.

ISO 13232 is applicable to impact tests involving:

— two-wheeled motorcycles;

— the specified type of opposing vehicle;

— either a stationary and a moving vehicle or two moving vehicles;

— for any moving vehicle, a steady speed and straight-line motion immediately prior to impact;

— one helmeted dummy in a normal seating position on an upright motorcycle;

— the measurement of the potential for specified types of injury by body region;

— evaluation of the results of paired impact tests (i.e. comparisons between motorcycles fitted and not fitted with the proposed devices).

ISO 13232 does not apply to testing for regulatory or legislative purposes.

2 Normative references

The following referenced documents are indispensable for the application of this document. For dated references, only the edition cited applies. For undated references, the latest edition of the referenced document (including any amendments) applies.

ISO 13232-1, *Motorcycles — Test and analysis procedures for research evaluation of rider crash protective devices fitted to motorcycles — Part 1: Definitions, symbols and general considerations*

© ISO 2005 – All rights reserved

ISO 13232-3, *Motorcycles — Test and analysis procedures for research evaluation of rider crash protective devices fitted to motorcycles — Part 3: Motorcyclist anthropometric impact dummy*

ISO 13232-6, *Motorcycles — Test and analysis procedures for research evaluation of rider crash protective devices fitted to motorcycles — Part 6: Full-scale impact test procedures*

ISO 13232-7, *Motorcycles — Test and analysis procedures for research evaluation of rider crash protective devices fitted to motorcycles — Part 7: Standardized procedures for performing computer simulations of motorcycle impact tests*

ISO 13232-8, *Motorcycles — Test and analysis procedures for research evaluation of rider crash protective devices fitted to motorcycles — Part 8: Documentation and reports*

ISO 6487, *Road vehicles — Measurement techniques in impact tests — Instrumentation*

SAE 1733, Sign convention for vehicle crash testing, Warrendale, Pennsylvania, USA

3 Definitions, symbols, and abbreviations

The following terms are defined in ISO 13232-1. For the purposes of this part of ISO 13232, those definitions apply. Additional definitions which could apply to this part of ISO 13232 are also listed in ISO 13232-1:

— aim point;

— blur;

— cursor;

— detachable external cables;

— digitizing surface;

— film analysis frame;

— frame width;

— helmet centroid point;

— high speed photography;

— leading edge;

— magnification;

— motion analyser grid;

— oblique camera;

— off axis;

— output signal voltage;

— overall accuracy of the film analysis;

STANDARDSISO.COM : Click to view the full PDF of ISO 13232-4:2005

© ISO 2005 – All rights reserved

— primary axis;

— signal gain;

— trailing edge;

— visual resolution.

4 Requirements

4.1 Electronically recorded variables

4.1.1 Required

The variables listed below shall be recorded in all full-scale impact tests from at least 0,100 s before first MC/OV contact until at least 3,000 s after first MC/OV contact, using the sensors described in 4.4.1:

a) first MC/OV contact occurrence;

b) head (nine linear accelerations):

1) bottom centre acceleration in three axes (a_1, a_4, a_7),

2) top centre acceleration in two axes (a_3, a_6),

3) bottom left acceleration in two axes (a_5, a_9),

4) bottom right acceleration in two axes (a_2, a_8);

c) chest:

1) sternum upper left displacement (l_{uL}),

2) sternum upper right displacement (l_{uR}),

3) sternum lower left displacement (l_{lL}),

4) sternum lower right displacement (l_{lR}).

d) upper neck

1) upper neck antero - posterior shear force ($F_{x,n}$),

2) upper neck lateral shear force ($F_{y,n}$),

3) upper neck tension/compression forces ($F_{z,n}$),

4) upper neck lateral bending moment ($M_{x,n}$),

5) upper neck flexion/extension moment ($M_{y,n}$),

6) upper neck torsional moment ($M_{z,n}$).

STANDARDSISO.COM : Click to view the full PDF of ISO 13232-4:2005

© ISO 2005 – All rights reserved

4.1.1.1 Additionally required for leg protective device evaluation

a) left and right upper femur:

   1) axial force ($F_{z,uF}$),

   2) lateral bending moment ($M_{x,uF}$),

   3) antero-posterior bending moment ($M_{y,uF}$);

b) left and right upper tibia:

   1) lateral bending moment ($M_{x,uT}$),

   2) antero-posterior bending moment ($M_{y,uT}$).

4.1.2 Not recommended

The variables listed below should not be recorded because of motorcyclist anthropometric impact dummy biofidelity limitations:

— chest accelerations;

— pelvic accelerations.

4.1.3 Permissible

In addition to the required variables listed in 4.1.1, the variables listed below may be recorded:

a) lumbar spine:

   1) antero-posterior shear force ($F_{x,l}$),

   2) lateral shear force ($F_{y,l}$),

   3) axial force ($F_{z,l}$),

   4) lateral bending moment ($M_{x,l}$),

   5) antero-posterior bending moment ($M_{y,l}$),

   6) torsional moment ($M_{z,l}$);

b) left and right upper femur:

   1) axial force ($F_{z,uF}$),

   2) lateral bending moment ($M_{x,uF}$),

   3) antero-posterior bending moment ($M_{y,uF}$),

   4) torsional moment ($M_{z,uF}$);

c) left and right lower femur:

STANDARDSISO.COM : Click to view the full PDF of ISO 13232-4:2005

© ISO 2005 – All rights reserved

1) axial force ($F_{z,lF}$),

2) lateral bending moment ($M_{x,lF}$),

3) antero-posterior bending moment ($M_{y,lF}$),

4) torsional moment ($M_{z,lF}$);

d) left and right upper tibia:

1) lateral bending moment ($M_{x,uT}$),

2) antero-posterior bending moment ($M_{y,uT}$),

3) torsional moment ($M_{z,uT}$);

e) left and right lower tibia:

1) axial force ($F_{z,lT}$),

2) lateral bending moment ($M_{x,lT}$),

3) antero-posterior bending moment ($M_{y,lT}$).

f) left and right femur and tibia: frangible bone continuity sensor

4.2 Mechanically recorded variables

The variables listed below shall be recorded in all full-scale impact tests using the sensors described in 4.4.2 and the procedures described in 5.2.3:

— abdomen maximum residual penetration ($p_{A,max}$);

— left and right femur fracture occurrence;

— left and right knee varus valgus dislocation occurrence;

— left and right knee torsional dislocation occurrence;

— left and right tibia fracture occurrence.

4.3 Photographic targets to be digitized

The targets listed below shall be digitized at first MC/OV contact, unless otherwise stated.

The high speed photographic data shall be analysed using a motion analyser for which the ratio of the overall accuracy to the magnification is 0,007 or less[1)].

1) A list describing one or more example products which meet these requirements is maintained by the ISO Central Secretariat and the Secretariat of ISO/TC 22/SC 22. The list is maintained for the convenience of users of ISO 13232 and does not constitute an endorsement by ISO of the products listed. Alternative products may be used if they can be shown to lead to the same results.

STANDARDSISO.COM : Click to view the full PDF of ISO 13232-4:2005

© ISO 2005 – All rights reserved

4.3.1 Helmet centroid point

The following helmet centroid point variables shall be determined for the time frame and using the procedures defined in 5.2.4 and Annex A:

— inertial longitudinal position (x_h);

— inertial lateral position (y_h);

— inertial vertical position (z_h).

4.3.2 Motorcycle

Motorcycle targets which shall be digitized include the following:

— upper and lower targets on the top to bottom centre line, visible from the rear view, or front view if only the front camera is used;

— front and rear targets on the front to rear centre line, visible from the MC top view;

— main frame front and rear reference, visible from the MC side view, from at least 10 film analysis frames before first MC/OV contact until at least first MC/OV contact.

4.3.3 Opposing vehicle

The opposing vehicle targets which shall be digitized and their locations are given in Table 1.

Table 1 — Opposing vehicle targets

Target	Locations
Bonnet centre line	100 mm rearward from the bonnet leading edge
	100 mm forward from the bonnet trailing edge
Roof centre line	100 mm rearward from the roof leading edge
	100 mm forward from the roof trailing edge
Boot lid centre line	100 mm forward from the boot lid trailing edge
	100 mm rearward from the boot lid leading edge
Body side reference[a]	Visible from OV side view camera

[a] From at least 10 film analysis frames before first MC/OV contact until at least first MC/OV contact.

STANDARDSISO.COM : Click to view the full PDF of ISO 13232-4:2005

4.3.4 Ground

At least two targets shall be fixed on the ground and shall be visible in each camera prior to and at first MC/OV contact. They shall be at least 2 m apart. The *z* locations of all target centres shall be equal. At least one of the ground fixed targets shall be visible and undisturbed in each camera from at least 10 film analysis frames before first MC/OV contact until at least first MC/OV contact. Multiple targets should be used to increase the likelihood that at least one is visible and undisturbed during the entire film analysis sequence.

© ISO 2005 – All rights reserved

4.3.4.1 MC side view and MC top view

The ground fixed targets which are visible in the MC side view and MC top view cameras shall be aligned such that a line connecting the targets is parallel to the pre-impact centre line or path of the MC.

4.3.4.2 MC rear or MC front view

The ground fixed targets which are visible in the MC rear view or MC front view camera shall be aligned such that a line connecting the targets is perpendicular to the pre-impact centre line of the MC. A third ground fixed target shall be visible and be aligned such that it is at least 1 m above and along the z inertial axis of either of the other two ground fixed targets.

4.3.4.3 OV side view

The ground fixed targets which are visible in the OV side view camera shall be aligned such that a line connecting them is parallel to the pre-impact centre line or path of the OV.

4.3.5 Dummy

The dummy joint target locations, as defined in 5.3.6 of ISO 13232-6, shall be digitized in the film frame immediately preceding first MC/OV contact, according to 5.3.5 of this part of ISO 13232.

If the test data are to be used for simulation comparison, according to 4.5.4 of ISO 13232-7, then these target locations shall also be digitized according to the procedures defined in 5.2.4 of this part of ISO 13232.

4.4 Sensor specifications

4.4.1 Electrical

4.4.1.1 Head accelerometers

The head linear accelerations listed in 4.1.1 shall be measured using Endevco accelerometers, model 7264-2000[2)], mounted using an accelerometer block[3)] as shown in Figure 1a and 1b. The mounting block shall be attached to the Hybrid III head using a mounting base[3)] as shown in Figure 2.

4.4.1.2 Upper neck load cell

The neck variables listed in 4.1.1 shall be measured using a Denton load cell, model 1716[4)].

STANDARDSISO.COM : Click to view the full PDF of ISO 13232-4:2005

2) Accelerometer model 7264-2000 is a product supplied by Endevco Corp, San Juan Capistrano, California, USA. This information is given for the convenience of users of ISO 13232 and does not constitute an endorsement by ISO of the product named. Alternative products may be used if they can be shown to lead to the same results.

3) A list describing one or more example products which meet these requirements is maintained by the ISO Central Secretariat and the Secretariat of ISO/TC 22/SC 22. The list is maintained for the convenience of users of ISO 13232 and does not constitute an endorsement by ISO of the products listed. Alternative products may be used if they can be shown to lead to the same results.

4) Load cell model 1716 is a product supplied by Robert A. Denton, Inc., Rochester Hills, Michigan, USA. This information is given for the convenience of users of ISO 13232 and does not constitute an endorsement by ISO of the product named. Alternative products may be used if they can be shown to lead to the same results.

© ISO 2005 – All rights reserved

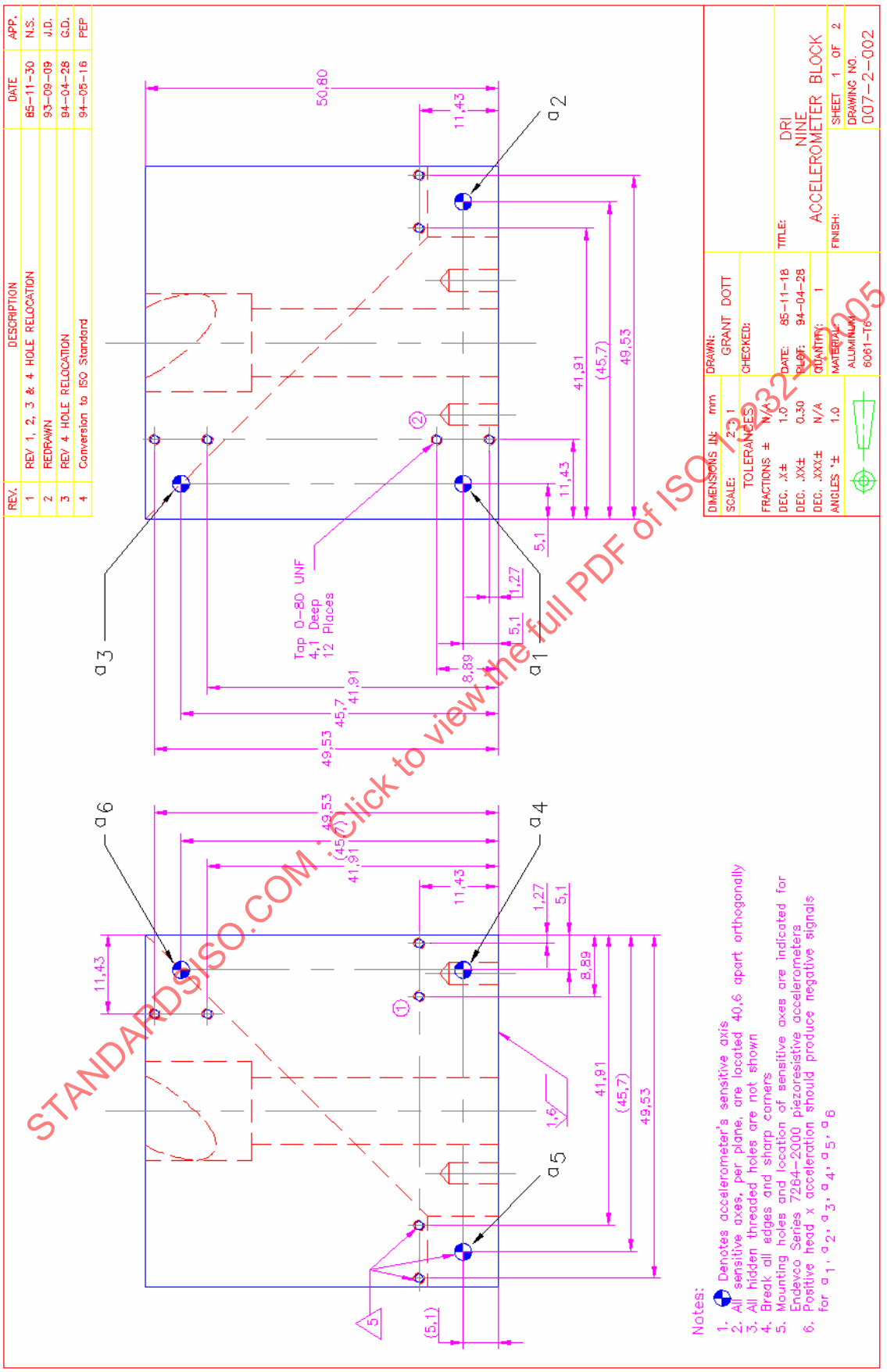

STANDARDSISO.COM : Click to view the full PDF of ISO 13232-4:2005

Figure 1a — Nine accelerometer block with accelerometer mounting locations and orientations

© ISO 2005 – All rights reserved

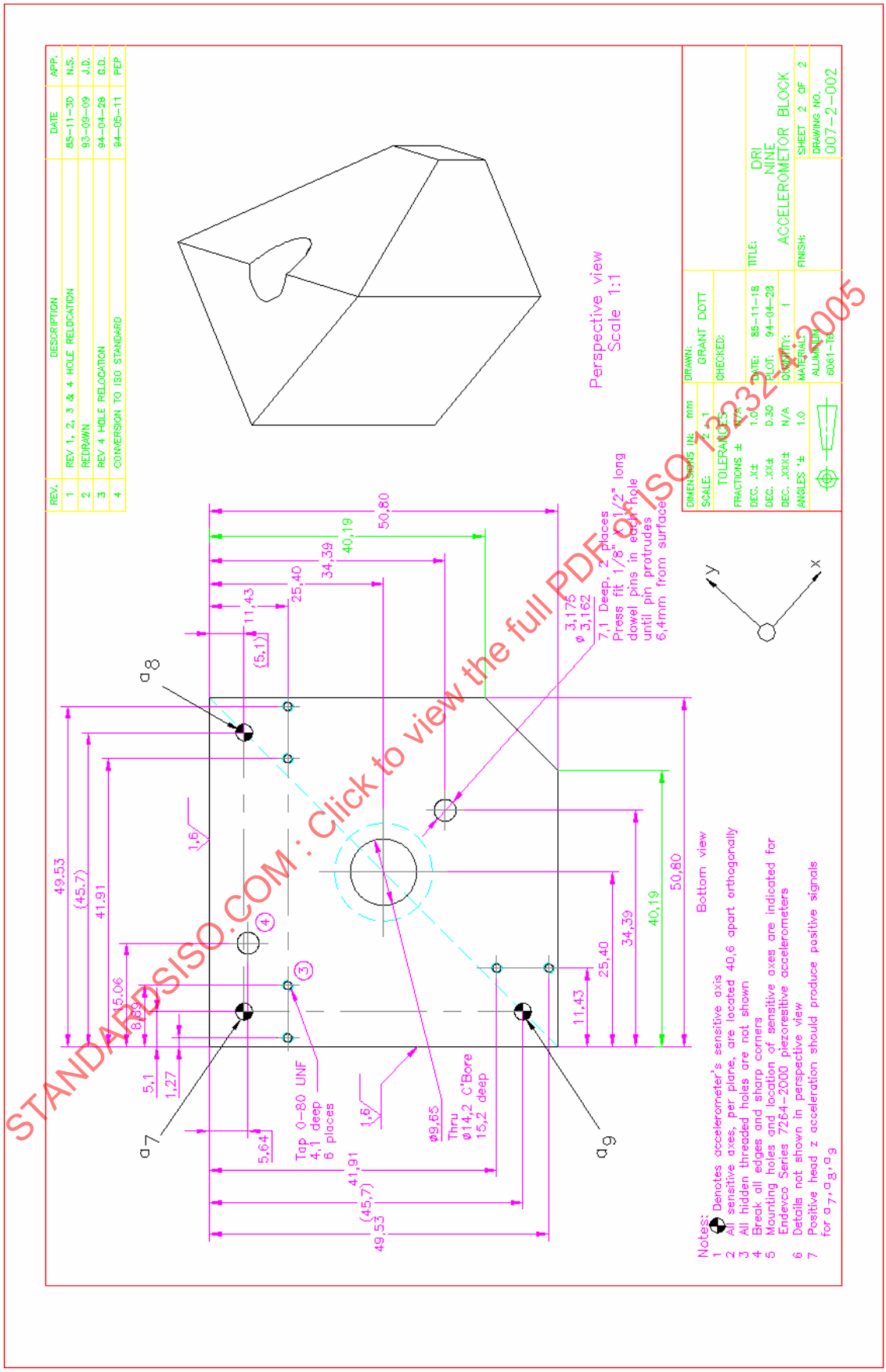

STANDARDSISO.COM : Click to view the full PDF of ISO 13232-4:2005

Figure 1b — Nine accelerometer block with accelerometer mounting locations and orientations

© ISO 2005 – All rights reserved

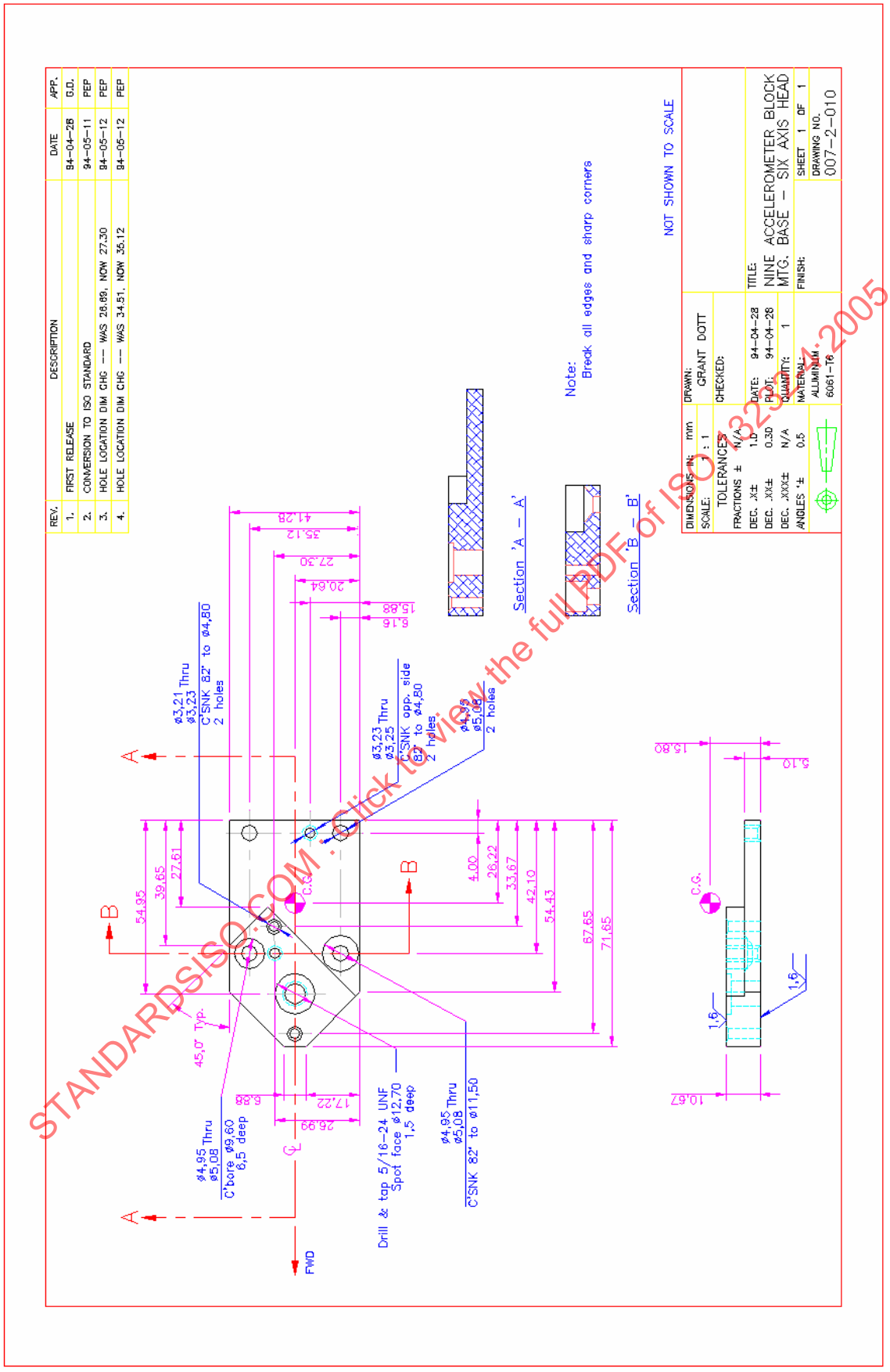

STANDARDSISO.COM : Click to view the full PDF of ISO 13232-4:2005

Figure 2 — Nine accelerometer block mounting base

© ISO 2005 – All rights reserved

4.4.1.3 Chest potentiometers

The chest displacements listed in 4.1.1 shall be measured using Space Age Control string potentiometers, models 160-321VL and 160-321VR[5], mounted as shown in Figure 3[6].

Alternative mounting configurations for the chest potentiometers may be used as long as the cable positions shown in Figure 3 are maintained. For example the lower right hand spooling potentiometer shown in Figure 3 could be replaced by a left hand spooling unit mounted below the cable location.

4.4.1.4 Lumbar load cell

The lumbar spine forces and moments listed in 4.1.3 shall be measured using a Denton load cell, model 1708[7] for six axes or model 1891[7] for three axes.

4.4.1.5 Upper femur load cells

The upper femur forces and moments listed in 4.1.1.2 and 4.1.3 shall be measured using Denton load cells, model 2693[7].

4.4.1.6 Frangible leg bone strain gauges

The strain gauges used to measure the lower femur and upper and lower tibia forces and moments listed in 4.1.1.2 and 4.1.3 shall conform to the specifications listed in Table 2. They shall be mounted on the bones at the locations shown in Figure 4.

Table 2 — Frangible leg bone strain gauge specifications

Parameter	Specification
Configuration	Half or full bridge
Resistance	350 ohms
Excitation	2,05 V - 0,05 V to 2,50 V + 0,05 V
Maximum cross axis sensitivity	5%
Gauge factor	2

Each frangible bone strain gauged variable recorded in each full-scale test shall be calibrated according to 5.2.2.

NOTE Frangible bone strain gauges which have been properly mounted and calibrated can provide useful additional information in crash tests regarding the general magnitude, direction and timing of bone forces, prior to or in the absence of bone fracture. However, because they are exposed to damage from various sources, and because of possible installation variations, they might not be reliable in all cases, in particular for the time period during and after a bone fractures. In addition,

STANDARDSISO.COM : Click to view the full PDF of ISO 13232-4:2005

5) String potentiometer models 160-321VL and 160-321VR are products supplied by Space Age Controls, Inc., Palmdale, California, USA. This information is given for the convenience of users of ISO 13232 and does not constitute an endorsement by ISO of the product named. Alternative products may be used if they can be shown to lead to the same results.

6) A list describing one or more example products which meet these requirements is maintained by the ISO Central Secretariat and the Secretariat of ISO/TC 22/SC 22. The list is maintained for the convenience of users of ISO 13232 and does not constitute an endorsement by ISO of the products listed. Alternative products may be used if they can be shown to lead to the same results.

7) Load cell models 1708, 1891, and 2693 are products supplied by Robert A. Denton, Inc., Rochester Hills, Michigan, USA. This information is given for the convenience of users of ISO 13232 and does not constitute an endorsement by ISO of the product named. Alternative products may be used if they can be shown to lead to the same results.

© ISO 2005 – All rights reserved

like load cells, they sense force in only one location, whereas the force components elsewhere in the bone can be much larger. For these and other reasons, they are not considered appropriate for injury evaluation or frangible bone conformity of production tests.

STANDARDSISO.COM : Click to view the full PDF of ISO 13232-4:2005

© ISO 2005 – All rights reserved

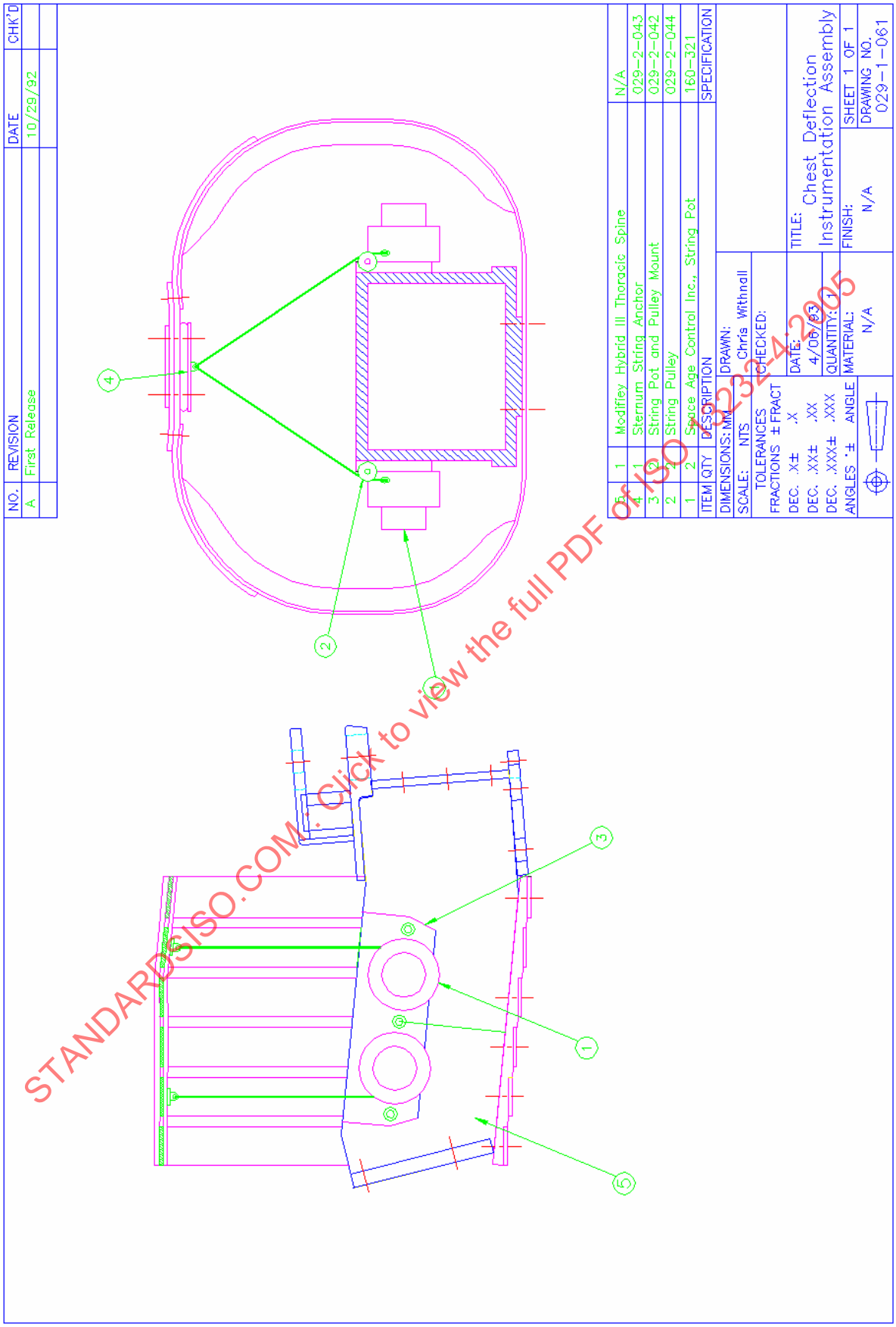

STANDARDSISO.COM : Click to view the full PDF of ISO 13232-4:2005

Figure 3 — Chest potentiometer installation

© ISO 2005 – All rights reserved

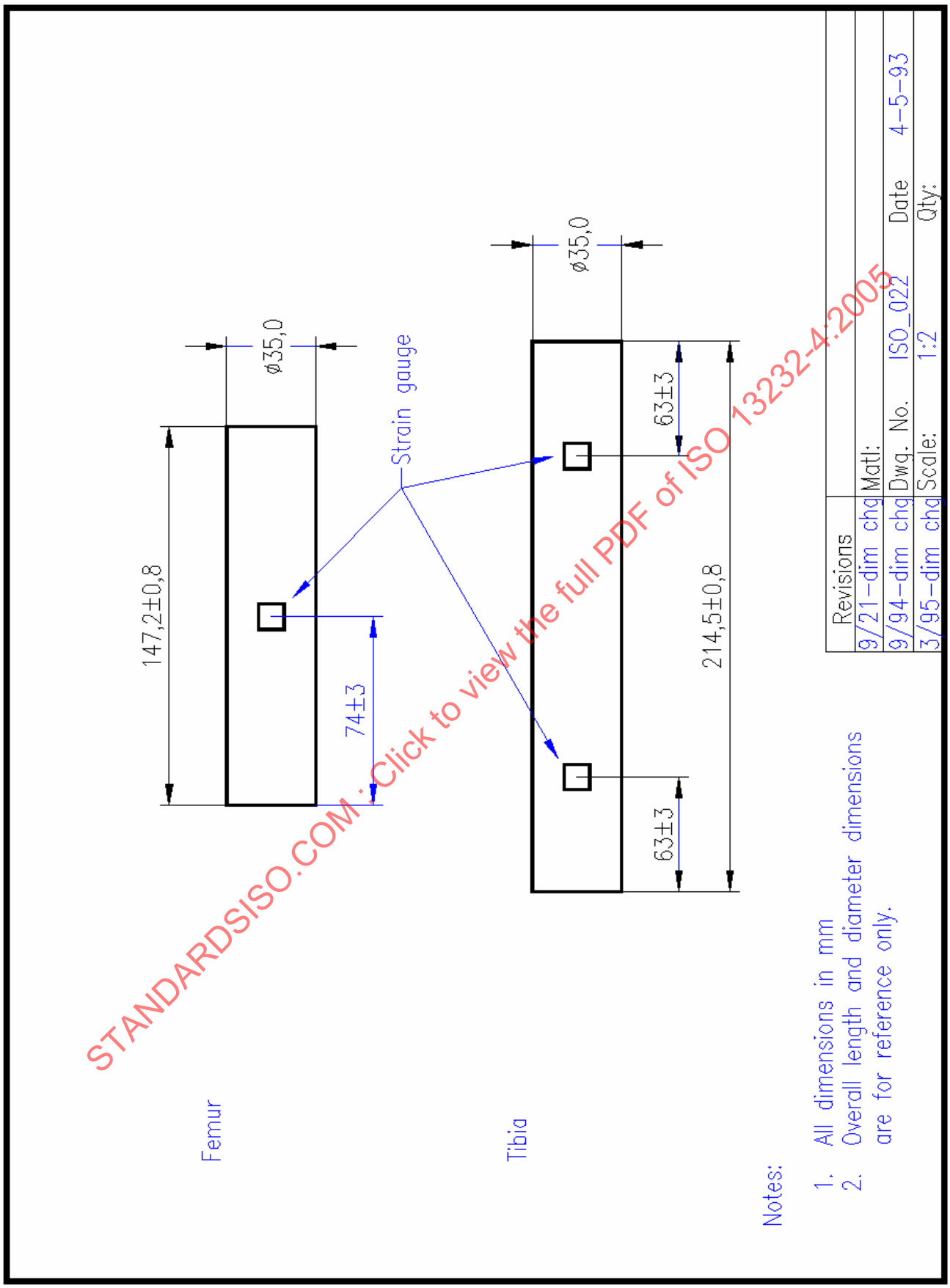

STANDARDSISO.COM : Click to view the full PDF of ISO 13232-4:2005

Figure 4 — Frangible bone strain gauge locations

© ISO 2005 – All rights reserved

4.4.1.7 Frangible bone continuity sensor

The frangible bone continuity sensor used to monitor frangible bone breakage shall be mounted on all four bones as shown in Figure 5, using the procedure described in 5.4.

4.4.2 Mechanical

All mechanical sensors shall conform to the specifications given in ISO 13232-3. The sensors shall include:

— an abdominal foam insert;

— frangible femur and tibia bones;

— knee compliance elements;

— knee shear pins.

4.5 Internal data acquisition and recording system specifications[8)]

There should be no external cables attached to the dummy, except during the pre-crash phase, detachable cables to supply power to the internal data acquisition system and the MC/OV contact sensor. A maximum force of 5 N shall be required to detach the cables.

4.5.1 Not recommended external cables

Non-detachable external cables should not be used, but if used, each cable shall have a mass not greater than 1/3 kg and a length not shorter than 12 m. The total mass of all of the cables, between the dummy and the point of attachment to the MC, shall not exceed 4 kg. The cables shall be arranged so that each is unrestrained. They shall not be attached to the MC, the dummy, or any other cable, except at the cable extremities. The cables shall be attached to the dummy by means of a connector attached to the rear portion of the pelvis.

4.5.2 Data acquisition

The data acquisition system shall be capable of recording a minimum of 32 channels, at a minimum bandwidth of 2.5 kHz for analog recording or a minimum sampling rate of 10 kHz for digital recording. The following system specifications shall apply.

4.5.2.1 Sensor excitation

The load cells and accelerometers shall have a 10,0 V ± 0,2 V excitation. The potentiometers and strain gauges shall have an excitation of 2,00 V - 0,05 V to 2,50 V + 0,05 V.

4.5.2.2 Anti alias filtering for digital systems

All analog data channels shall be filtered before digitizing such that the data is attenuated by at least 40 dB above a frequency of 7 kHz.

STANDARDSISO.COM : Click to view the full PDF of ISO 13232-4:2005

8) A list describing one or more example products which meet these requirements is maintained by the ISO Central Secretariat and the Secretariat of ISO/TC 22/SC 22. The list is maintained for the convenience of users of ISO 13232 and does not constitute an endorsement by ISO of the products listed. Alternative products may be used if they can be shown to lead to the same results.

© ISO 2005 – All rights reserved

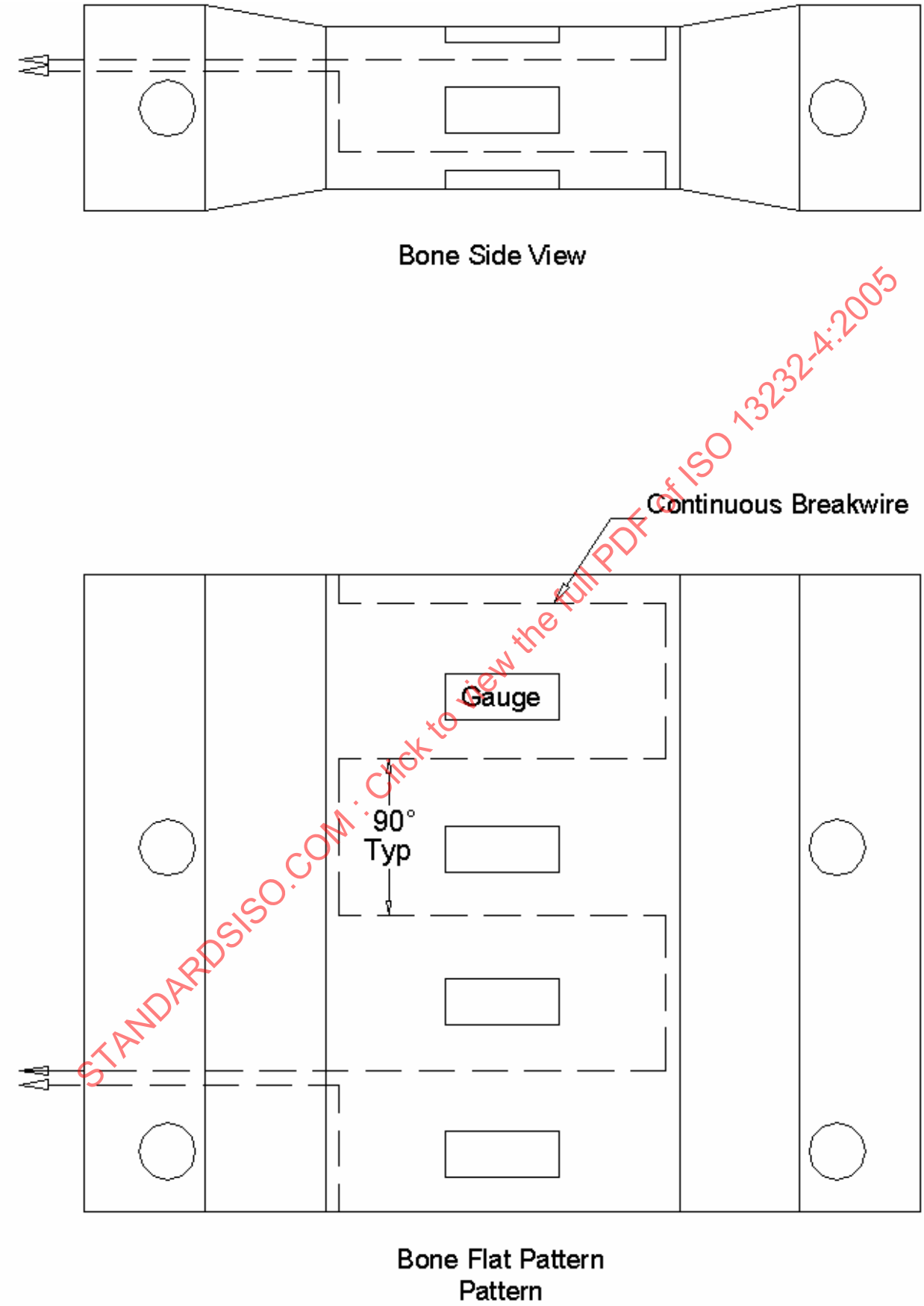

STANDARDSISO.COM : Click to view the full PDF of ISO 13232-4:2005

Figure 5 — Frangible bone break continuity sensor end-to-end wire pattern

© ISO 2005 – All rights reserved

4.5.2.3 Analog to digital conversion specifications for digital systems

The analog to digital conversion specifications shall be as given in Table 3.

Table 3 — A to D specifications for digital systems

Parameter	Specification
Minimum number of channels	32
Minimum sampling rate	10 000 per s per channel
Maximum inter-channel slew	$12{,}5 \times 10^{-6}$ s
Minimum number of bits	8
Gain sensitivity to temperature	± 2% over the range of 0° C to 70° C

4.5.2.4 Storage capacity

The minimum recording time capacity shall be 3,1 s.

4.5.2.5 Mechanical specifications for the internal data acquisition system

The system shall be dimensioned to fit inside the thoracic spine box and/or the modified sit/stand pelvis, described in ISO 13232-3. The upper torso and lower torso component masses and centres of gravity shall be as specified in ISO 13232-3. The system shall remain operational in all axes when subjected to a 60 g peak and 0,011 s duration haversine pulse.

4.5.2.6 Scaling of variables

For each recorded variable, the recorder channel gain shall be adjusted such that the minimum recording range corresponds to the value given in Table 4. The actual recording range may exceed that shown in Table 4 if the actual recorder resolution including noise (i.e., 10 bits) will result in the same or better signal resolution than that resulting from an 8 bit recorder and the minimum recording range shown in Table 4.

STANDARDSISO.COM : Click to view the full PDF of ISO 13232-4:2005

© ISO 2005 – All rights reserved

Table 4 — Full-scale recording ranges

Body region	Injury assessment variable	Range
Head	a_1, a_4, a_7	± 400 g
	a_3, a_6	
	a_5, a_9	
	a_2, a_8	
Upper neck	$F_{x,n}$, $F_{y,n}$	± 15 kN
	$F_{z,n}$	± 30 kN
	$M_{x,n}$	± 700 N·m
	$M_{y,n}$	± 1000 N·m
	$M_{z,n}$	± 700 N·m
Chest	$l_{uL,}$, l_{uR}	± 60 mm
	l_{lL}, l_{lR}	
Lumbar spine	$F_{x,l}$, $F_{y,l}$	± 5 kN
	$F_{z,l}$	± 10 kN
	$M_{x,l}$, $M_{y,l}$	± 500 N·m
	$M_{z,l}$	± 250 N·m
Upper femur	$F_{z,uF}$	± 12 kN
	$M_{x,uF}$, $M_{y,uF}$	± 600 N·m
	$M_{z,uF}$	± 400 N·m
Lower femur	$F_{z,lF}$	± 12 kN
	$M_{x,lF}$, $M_{y,lF}$	± 500 N·m
	$M_{z,lF}$	± 300 N·m
Upper tibia	$M_{x,uT}$, $M_{y,uT}$	± 400 N·m
	$M_{z,uT}$	± 200 N·m
Lower tibia	$F_{z,lT}$	± 40 kN
	$M_{x,lT}$, $M_{y,lT}$	± 400 N·m

STANDARDSISO.COM : Click to view the full PDF of ISO 13232-4:2005

4.6 High speed photography

4.6.1 Camera specifications

The cameras, lenses, camera locations, lines of sight, and aim points shall be the same for all tests in a paired comparison.

The following shall be documented for each camera:

© ISO 2005 – All rights reserved

— the camera x, y, z locations relative to the targetted OV contact point, as defined in Figure 1 of ISO 13232-2, as expected at first MC/OV contact, projected to ground level and using the axis conventions defined in ISO 13232-8, A.6.5.1;

— the lens focal length;

— the approximate centre point of the field of view.

4.6.2 Required cameras

All cameras used for trajectory and velocity analysis shall have a 100 Hz minimum internal timing light visible in the field of view at all times.

The cameras shall have open shutter duration times which limit the blur of the dummy helmet to a maximum of 0,020 mm, at pre-impact velocity. For example, the required maximum open shutter duration time for a film image width of 10 mm, object width of 5 000 mm, and velocity of 15 000 mm/s is 0,00067 s.

The required cameras and their specifications shall be as given in Table 5. The recommended fields of view and minimum focal lengths shall be as defined in Table B.1 of Annex B. If high speed photographic cameras are used, they should use 16 mm film. Larger film formats may be used, in which case the minimum focal lengths listed in Table B.1 shall be increased by the ratio of the larger film format to 16 mm.

4.6.3 Recommended cameras

The following cameras should be used to provide additional observation capabilities:

— MC oblique view (field of view as appropriate);

— MC front view, if applicable (see Table 5 for field of view);

— OV front or rear view (5 m wide field of view);

— OV side view (8 m wide field of view);

— MC side view, if MC front or rear is used for motion analysis for impact condition 143 (field of view as appropriate).

The fields of view for these cameras should be such that the dummy head is visible in the frame from at least 0,100 s before to 0,500 s after first MC/OV contact. A wider field of view may be used to evaluate overall dynamics of the impact sequence.

4.7 Still photography

Photographs or other high-resolution image recordings for use in dummy position verification shall be taken after the MC has been placed in its launch position and within 0,100 s before first MC/OV contact.

If a still photographic camera is used, the film size shall be at least 35 mm. The shutter speed setting shall be 1/500 s or faster. The minimum focal lengths and fields of view for 35 mm film shall be as given in Table 6. Larger film formats may be used, in which case the minimum focal lengths listed in Table 6 shall be increased by the ratio of the larger film format to 35 mm.

STANDARDSISO.COM : Click to view the full PDF of ISO 13232-4:2005

© ISO 2005 – All rights reserved

Table 5 — Required cameras and specifications

Camera view	Frame rate f/s	Camera field of view	Line of sight	Subjects at expected first MC/OV contact
MC top	400, minimum	Given in Annex B	Perpendicular to ground	Dummy helmet, first MC/OV contact point, OV, MC and ground targets
MC side, on side giving most unobstructed view of helmet trajectory (except for impact condition 143)	400, minimum	Given in Annex B	Perpendicular to pre-impact path of MC	Dummy helmet, first MC/OV contact point, OV, MC and ground targets
MC rear or front for impact condition 143	400 minimum	Given in Annex B	Perpendicular to pre-impact path of OV	Dummy helmet, first MC/OV contact point, OV, MC and ground targets
MC rear or front, as appropriate	400, minimum	Vertical, 30% ± 10% larger than overall MC/ dummy height at expected first MC/OV contact	Within 5° of parallel to pre-impact path of MC	MC and ground targets, dummy helmet
OV side, if OV speed is determined photographically	400, minimum	Given in Annex B	Perpendicular to pre-impact path of OV	OV and ground targets

STANDARDSISO.COM : Click to view the full PDF of ISO 13232-4:2005

© ISO 2005 – All rights reserved

Table 6 — Still photograph minimum focal lengths and field of view widths

View	Minimum focal length mm	Field of view width m
Side	100	4
Top	50	4

Alternative high resolution imaging systems, such as digital still or high speed video cameras, may be used if the user demonstrates that the system resolution, shutter speed, and field of view will enable the user to measure full-scale target locations, with a standard deviation of 0,25 cm or less (i.e., a total error of 0,50 cm when comparing the pre-test and pre-impact images). For a given test series, documentation of this demonstration shall be attached to the test reports that are specified in ISO 13232-8.

5 Measurement methods

5.1 Pre-test measurements related to data reduction

For each ground target, measure the x, y, z locations relative to the targetted OV contact point, as defined in Figure 1 of ISO 13232-2, as expected at first MC/OV contact, projected to ground level and using the axis conventions defined in ISO 13232-8, A.6.5.1.

Before the impact test, measure the following:

— distance between the photo-optic or electro-mechanical contact switches;

— OV overall width.

If the high speed camera lens focal length is less than that specified in Table B.1, record a grid pattern with each required high speed camera, prior to each impact test, on the same film as the impact test footage, using a grid of targets equally spaced throughout the camera field of view.

5.2 Data reduction

5.2.1 Electronic data

Define the time when first MC/OV contact is electronically sensed to be time zero, t = 0,000 s. Define data zero to be the average of the first 0,010 s of data, beginning 0,050 s before time zero. Convert the data to scaled data in physical units, using data zero and retaining three significant figures. Filter the data such that the overall frequency response of data output to unfiltered analog input is in accordance with ISO 6487 and the frequency response classes are as given in Table 7.

STANDARDSISO.COM : Click to view the full PDF of ISO 13232-4:2005

© ISO 2005 – All rights reserved

Table 7 — Motorcyclist anthropometric impact dummy frequency response classes

Typical test measurements	Frequency response class
Head linear accelerations	1000
Neck	
Forces	1000
Moments	600
Thorax	
Deflections	180
Lumbar	
Forces	1000
Moments	1000
Femur/tibia	
Forces	600
Moments	600

Separate the data into windows identified as primary or secondary impact periods.

Store the data in electronic files which are compatible with the latest version of ISO 13499.

Calculate the head linear accelerations, $a_{x,H}$, $a_{y,H}$, and $a_{z,H}$, and the head angular accelerations, $\alpha_{x,H}$, $\alpha_{y,H}$, and $\alpha_{z,H}$, over time, using the program which is included in Annex C.

Calculate neck occipital condyle moments using the procedures given in SAE J1733.

5.2.2 Calibration of frangible leg bone strain gauges

Calibrate each frangible bone strain gauged variable using the procedure described below.

5.2.2.1 Load application

Apply the following loads to the bone, one at a time, as shown in the corresponding figures:

— F_z = 3 000 N, as shown in Figure 6;

— M_x = 20 N·m, as shown in Figure 7;

— M_y = 20 N·m, as shown in Figure 7;

— M_z = 10 N·m, as shown in Figure 8.

5.2.2.2 Record data

For each of the four applied loads and each strain gauge data channel planned to be used during a crash test, record the following information in Table 8, 9, or 10:

— excitation voltage;

STANDARDSISO.COM : Click to view the full PDF of ISO 13232-4:2005

© ISO 2005 – All rights reserved

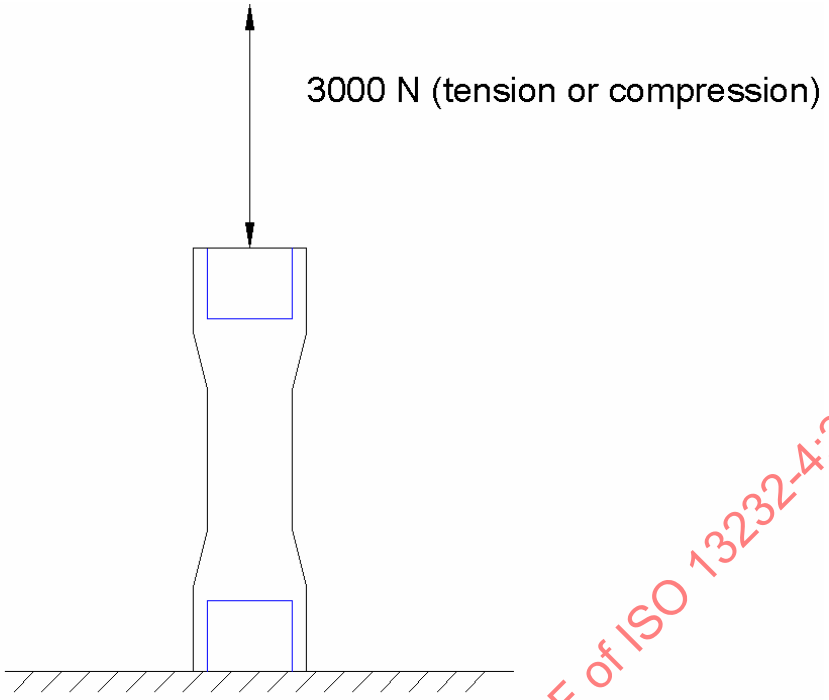

Figure 6 — F_z strain gauge calibration

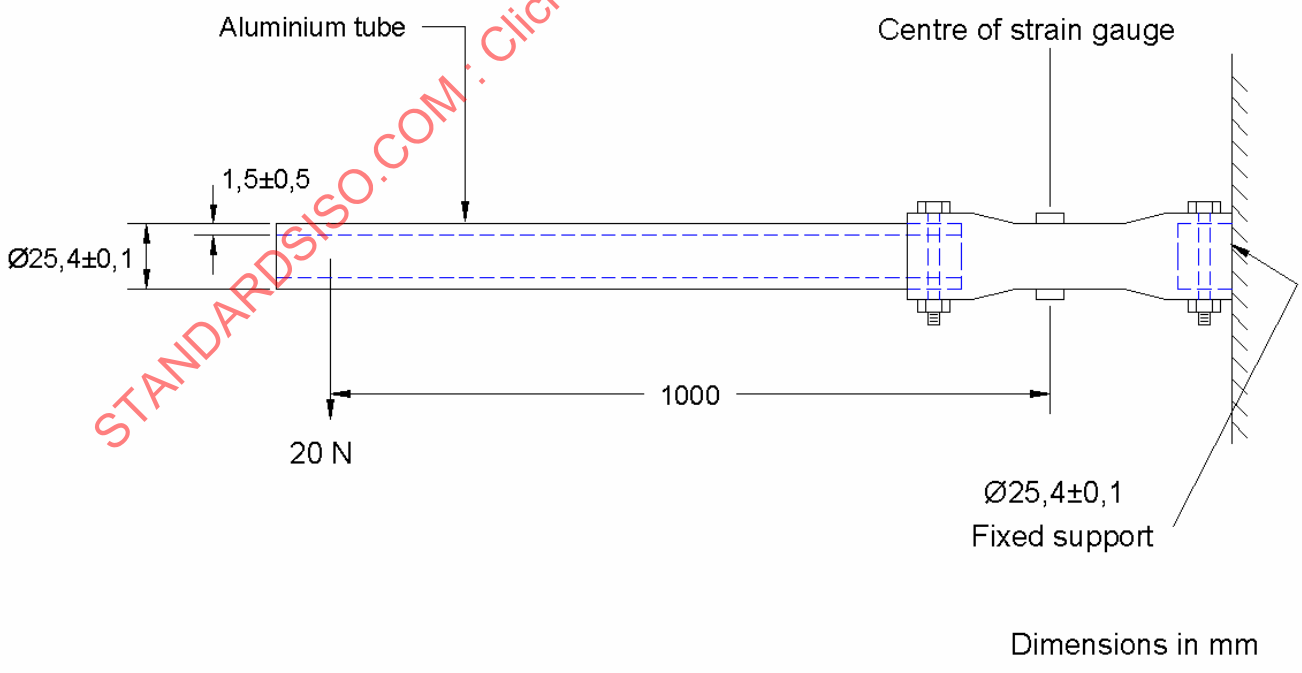

Figure 7 — M_x and M_y strain gauge calibration

STANDARDSISO.COM : Click to view the full PDF of ISO 13232-4:2005

© ISO 2005 – All rights reserved

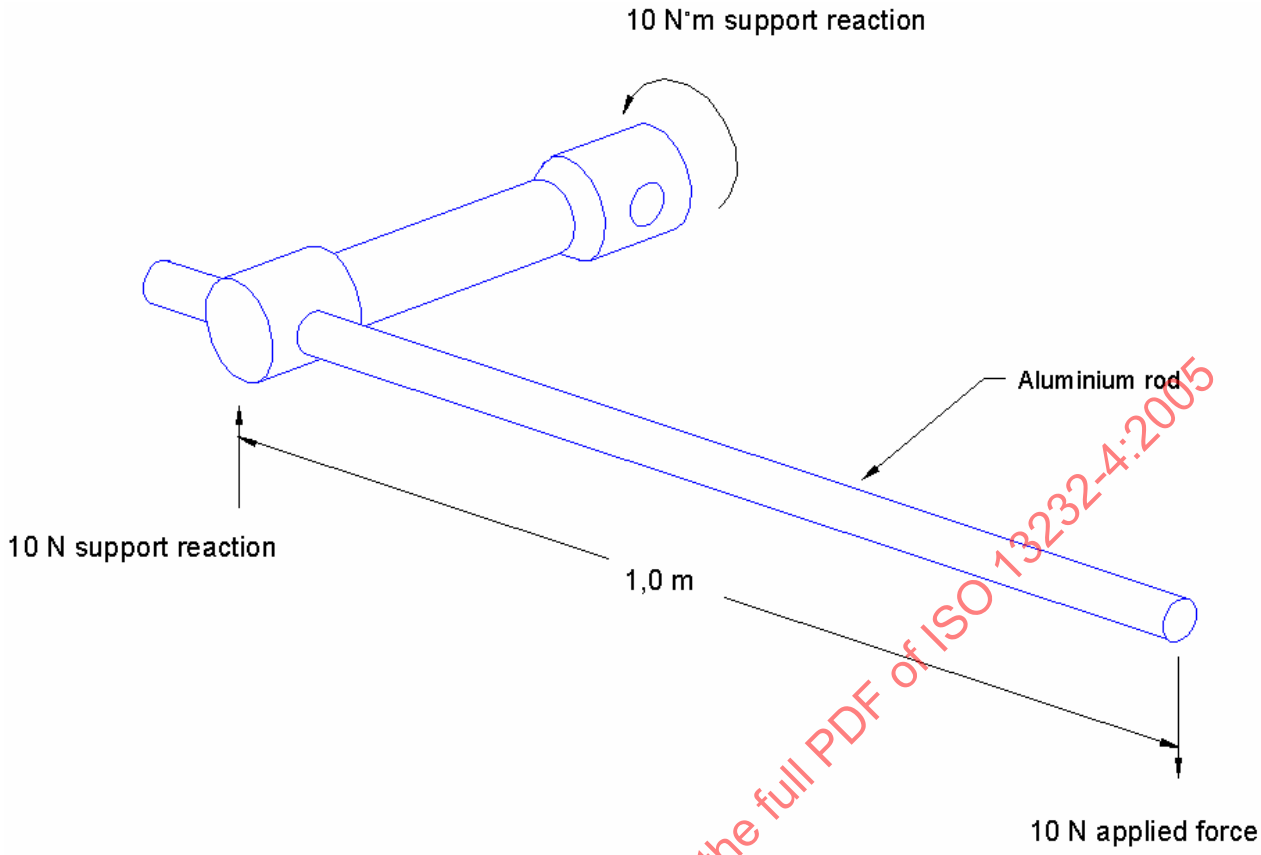

Figure 8 — M_z strain gauge calibration

STANDARDSISO.COM : Click to view the full PDF of ISO 13232-4:2005

— signal gain used for the calibration procedure (may be different than the signal gain used during a full-scale impact test);

— the change in output signal voltage which is caused by the application of each respective load.

Select a signal gain such that the signal-to-noise ratio as calculated in 5.2.2.3 is 250 or more. Record all off axis signals for each applied load and for each data channel to be recorded in the full-scale test. If a specific data channel is not to be recorded in the full-scale test, enter "N.A." (not applicable) in the corresponding row of Table 8, 9, or 10.

5.2.2.3 Sensor primary sensitivity

For each data channel, calculate and enter into Table 8, 9, or 10 the sensor primary sensitivity per volt of excitation, using the applied load and resulting change in output signal voltage for the primary axis of the sensor, as shown in the following example equations:

Primary sensitivity = $\Delta E_0 / E_e L$ Gain

where

primary sensitivity is in volts per newton per volt or volts per newton·meter per volt;

ΔE_0 is the change in output signal voltage, in volts;

© ISO 2005 – All rights reserved

Table 8 — Calibration data for femur strain gauges

Bone identification _____

Excitation voltage _____

Data channel	Signal gain	Change in output signal voltage for applied load				Primary sensitivity
		F_z at 3 000 N	M_x at 20 N·m	M_y at 20 N·m	M_z at 10 N·m	
Femur F_z						a
Femur M_x						b
Femur M_y						b
Femur M_z						b
	Denotes primary voltage change, used to calculate primary sensitivity.					

a Expressed in volts of output per newton per volt of excitation.

b Expressed in volts of output per newton·meter per volt of excitation.

Table 9 — Calibration data for upper tibia strain gauges

Bone identification _____

Excitation voltage _____

Data channel	Signal Gain	Change in output signal voltage for applied load				Primary sensitivity
		F_z at 3 000 N	M_x at 20 N·m	M_y at 20 N·m	M_z at 10 N·m	
Upper tibia M_x						a
Upper tibia M_y						a
Upper tibia M_z						a
	Denotes primary voltage change, used to calculate primary sensitivity.					

a Expressed in volts of output per newton·meter per volt of excitation.

STANDARDSISO.COM : Click to view the full PDF of ISO 13232-4:2005

© ISO 2005 – All rights reserved

Table 10 — Calibration data for lower tibia strain gauges

Bone identification _____

Excitation voltage _____

Data channel	Signal Gain	Change in output signal voltage for applied load				Primary sensitivity
		F_z at 3 000 N	M_x at 20 N·m	M_y at 20 N·m	M_z at 10 N·m	
Lower tibia F_z						a
Lower tibia M_x						b
Lower tibia M_y						b
	Denotes primary voltage change, used to calculate primary sensitivity.					

a Expressed in volts of output per newton per volt of excitation.

b Expressed in volts of output per newton·meter per volt of excitation.

E_e is the excitation voltage, in volts;

L is the applied load, in newtons or Newton ≅ meters;

Gain is the gain of the amplifier used during calibration.

S/N = $\Delta E_0 / Acc_{mtr}$

where

S/N is the signal-to-noise ratio;

ΔE_0 is the change in output signal voltage, in volts;

Acc_{mtr} is the accuracy of the meter.

If any off axis output signal voltages for a channel as listed in Tables 8, 9, or 10 exceed 15% of the primary voltage change for that channel, do not use that strain gauge data channel in a full-scale impact test.

If strain gauges are used in the full-scale impact tests, include Tables 8, 9, and 10, as applicable, in ISO 13232-8.

5.2.3 Frangible component data

Any loss of a dummy leg due to failure of the retaining cables shall be noted in the test documentation according to ISO 13232-8.

Disassemble the dummy. Inspect the frangible components. Photograph them against a contrasting background, at a scale which clearly indicates any fractures or deformations, and so that the test number clearly shows. If any off axis output signal voltages for a channel as listed in Tables 8, 9, or 10 exceed 15% of the primary voltage change for that channel, do not use that strain gauge data channel in a full-scale impact test.

If strain gauges are used in the full-scale impact tests, include Tables 8, 9, and 10, as applicable, in ISO 13232-8.

STANDARDSISO.COM : Click to view the full PDF of ISO 13232-4:2005

© ISO 2005 – All rights reserved

5.2.3.1 Tibia and femur bones

Determine the severity of damage to the frangible leg bones. A leg bone is considered fractured if the ends of the bone can be rotated relative to one another by manual means. Otherwise, it is considered to be not fractured. For a fractured bone, if the fractured bone pieces are placed in their initial unfractured relative positions, and if the fractured regions are more than 20 mm in axial extent, then the fracture is considered to be a displaced fracture. Otherwise, the fracture is considered to be a non-displaced fracture.

5.2.3.2 Knee torsional and varus valgus shear pins

Determine the severity of damage to each frangible knee joint. For each frangible knee, if one shear pin is fractured into two or more separate pieces, then the knee is considered to be partially dislocated. For each frangible knee, if two shear pins are fractured into two or more separate pieces, then the knee joint is considered to be completely dislocated. Otherwise, the knee is considered to be not dislocated.

5.2.3.3 Abdominal insert

Measure the maximum residual deformation depth of the abdominal insert material in the direction of abdominal crush, relative to the undeformed surface. This is considered to be the abdomen maximum residual penetration, $p_{A,max}$.

5.2.4 High speed photographic image data from required cameras

5.2.4.1 Time base analysis

Establish the first visible MC/OV contact or the last frame prior to emission of the contact sensor light, whichever is sooner. Analyse the data at the frame intervals given in Table B.1. Using the camera timing lights, calculate the time associated with each analysed film frame, from 10 film analysis frames before first MC/OV contact until 10 analysis frames after first helmet/OV contact or until 80 analysis frames after first MC/OV contact or until the helmet centroid leaves the field of view, whichever is sooner.

5.2.4.2 Helmet trajectory analysis

Using the procedures described in Annex A, digitize the helmet centroid point position for every Nth film frame. Calculate N using the equation given below, then round up to the nearest integer value.

$$N = \frac{0{,}012 W_f x r_f}{V_{x,MC,p}}$$

where

N is the film frame;

W_f is the frame width, in metres;

r_f is the frame rate, in frames per second;

$V_{x,MC,p}$ is the pre-impact velocity of the MC (or the OV for stationary MC tests), in metres per second;

0,012 is a constant which provides a signal-to-noise ratio of 6, given a film frame resolution of 0,2 percent of W_f.

Examples of film analysis intervals are given in Table B.1.

Digitize the helmet centroid point for the time frame defined in 5.2.4.1 using the following procedure:

STANDARDSISO.COM : Click to view the full PDF of ISO 13232-4:2005

© ISO 2005 – All rights reserved

5.2.4.2.1 Set x_h = y_h = 0 at first MC/OV contact, and z_h to be the z coordinate of the helmet centroid relative to the ground at first MC/OV contact, with z_g = 0.

5.2.4.2.2 Digitize and calculate the value of each helmet centroid point position relative to a fixed gound target, in order to eliminate the effects of camera framing variations. For all impact configurations except 143, digitize the y_h position using the MC top view camera, and digitize the x_h and z_h positions using the MC side view camera. For impact condition 143 digitize the x_h position using the MC top view camera, and digitize the y_h and z_h positions using the MC front or rear view camera.

NOTE This helmet trajectory analysis procedure is currently not very meaningful for impact configuration 143. It is intended that a future revision of ISO 13232 will address this issue.

5.2.4.2.3 Calculate x_h, y_h, and z_h using a depth correction factor. For example, for x_h:

$$x_h = x_{h,g} \times \frac{d_{c,h}}{d_{c,g}}$$

where

x_h is the depth corrected inertial x position of the helmet centroid point;

$x_{h,g}$ is the apparent inertial x position of the helmet centroid point relative to the ground fixed target;

$d_{c,h}$ is the perpendicular distance between the camera and the helmet centroid point, as calculated from measurements defined in 4.6.1 and the test layout geometry sketched in ISO 13232-8, A.6.5.1, in metres;

$d_{c,g}$ is the perpendicular distance between the camera and the ground fixed targets described in 4.3.4, as calculated from measurements defined in 4.6.2 and the test layout geometry sketched in ISO 13232-8, A.6.5.2, in metres.

5.2.4.2.4 Calculate the time associated with each analysis frame, using the camera timing light according to 5.2.4.1.

5.2.4.2.5 If the lens focal length is less than that specified in Table B.1, correct the positions for lens distortion by using a grid of targets, as specified in 5.1.

5.2.4.2.6 Smooth the positions using four passes of a moving average filter:

$$x_{h,l} = \frac{x_{h,i-1} + 2x_{h,i} + x_{h,i+1}}{4}$$

where

$x_{h,i}$ is the helmet centroid point position for analysis frame i, in metres.

5.3 Impact conditions

5.3.1 MC and OV impact speeds

Determine the distance travelled by the vehicle and the elapsed time required to travel that distance in order to calculate the vehicle speed using either the film analysis method or electronic method described below.

5.3.1.1 Film analysis method

Use the high speed MC and OV side cameras with the narrow view.

STANDARDSISO.COM : Click to view the full PDF of ISO 13232-4:2005

© ISO 2005 – All rights reserved

5.3.1.1.1 Distance

On the film digitizing surface, scale the distance between the two ground targets based on the previously measured actual distance, as measured in 5.1. Using this scale, locate the position of the vehicle target with respect to a single ground target in the film frames up to but not including, first MC/OV contact. Calculate the actual distance travelled by the vehicle target using a depth correction factor, according to 5.2.4.2.3, and such that the minimum distance travelled by the vehicle target during the measurement interval exceeds 1,0 m.

5.3.1.1.2 Elapsed time

Calculate the elapsed time over the measurement interval, using the film frame count at 1 000 fps. Multiply the elapsed time by the frame time correction, determined by the camera timing light.

5.3.1.2 Electronic method

5.3.1.2.1 Distance

Use two photo-optic or electro-mechanical contact switches located more than 1,0 m apart, and positioned immediately before the first MC/OV contact point. Record the electronic pulses on an electronic recording device which has an encoded time base and a maximum time base error of 0,001 s.

5.3.1.2.2 Elapsed time

Calculate the elapsed time, the difference in pulse times, measured with the electronic recording device.

5.3.2 Relative heading angle at impact

Use the film from the overhead, narrow view, high speed camera. Analyse the frame immediately preceding the first MC/OV contact. Draw a line connecting the MC front and rear centre line targets and draw another line connecting any two of the OV bonnet or boot lid centre line targets, or alternatively a line connecting the two OV roof centre line targets. Measure the angle clockwise from the MC centre line to the OV centre line.

5.3.3 MC roll angle at impact

Use the ground based vertical reference targets and the film from either the MC rear or the MC front view camera. Analyse the film frame immediately preceding the first MC/OV contact. Using either the front or rear tyre centre line, or a line connecting the upper and lower MC centre line targets, measure the angle between the ground based vertical reference and the MC vertical centre line reference.

5.3.4 OV contact point

Use the film from the overhead, narrow view, high speed camera. Analyse the film frame immediately preceding the first MC/OV contact.

If the OV contact point is the front, front corner, rear, or rear corner, and the MC contact point is the front or rear, then the OV contact point lateral distance (y_{cp}) is considered to be the distance, in metres, between the OV and MC centre lines, measured perpendicularly to the OV centre line, at the OV leading edge. See Figure 9a.

If the OV contact point is the side, calculate the OV contact point longitudinal distance (x_{cp}) as shown in Figure 9b, using the following equation:

$$x_{cp} = \left[\left(W_{OV} / 2\right)\tan\left(90 - rha\right)\right] + a$$

where

x_{cp} is the OV contact point longitudinal distance, in metres;

STANDARDSISO.COM : Click to view the full PDF of ISO 13232-4:2005

© ISO 2005 – All rights reserved

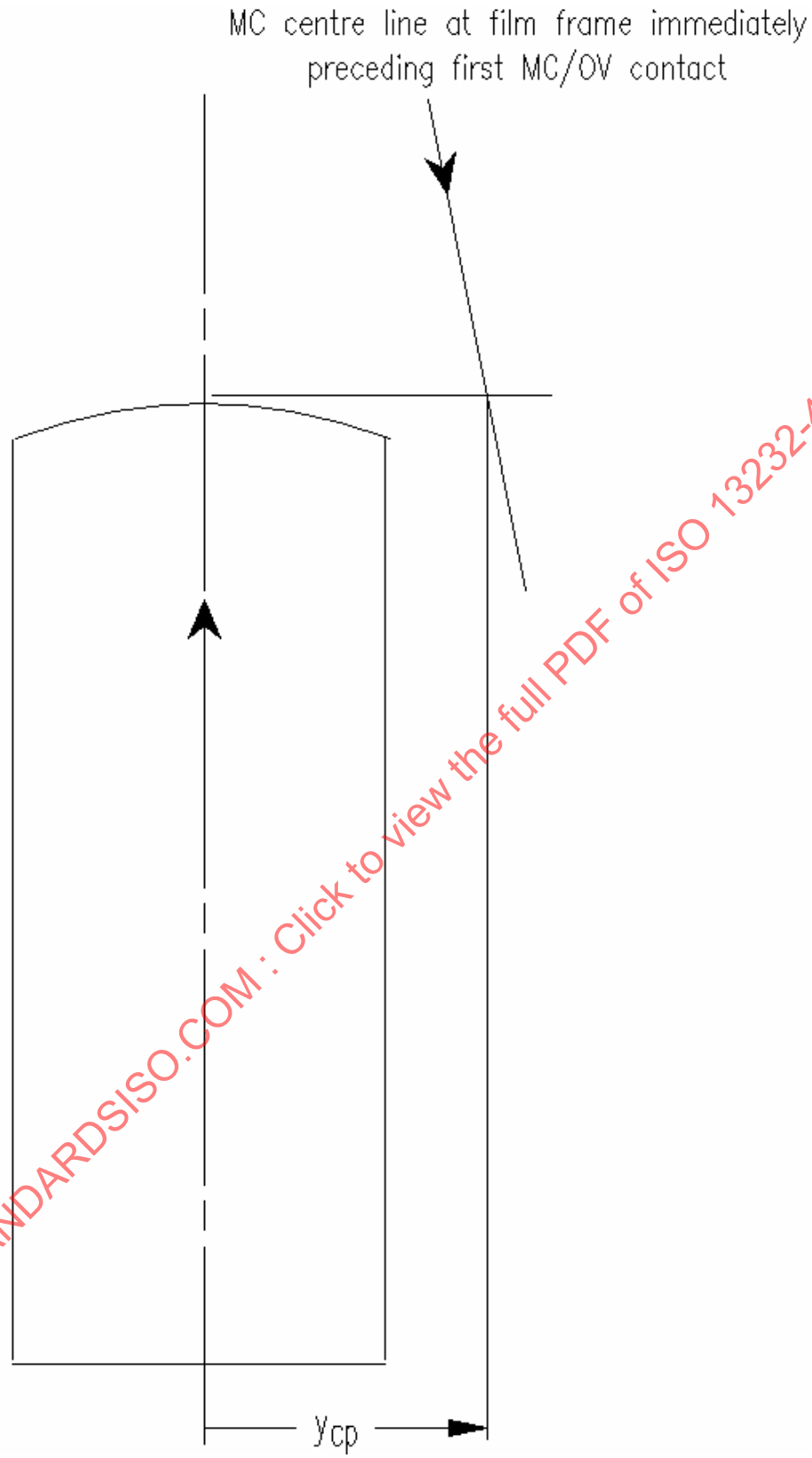

STANDARDSISO.COM : Click to view the full PDF of ISO 13232-4:2005

Figure 9a — OV contact point determination for OV front, front corner, rear, or rear corner contact with MC front or rear contact

© ISO 2005 – All rights reserved

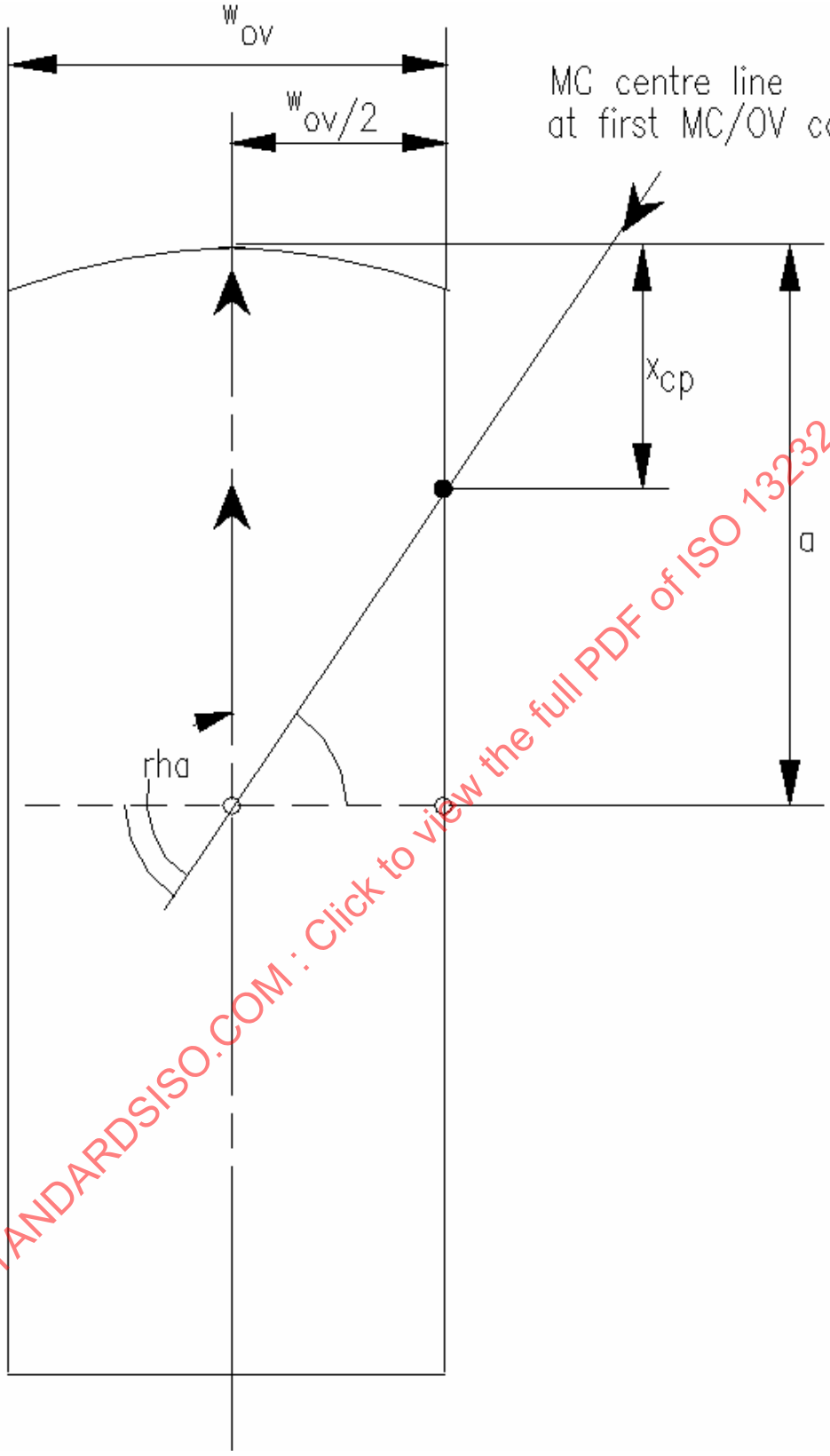

STANDARDSISO.COM : Click to view the full PDF of ISO 13232-4:2005

Figure 9b — OV contact point determination for OV side contact

© ISO 2005 – All rights reserved

W_{OV} is the OV overall width, in metres;

r_{ha} is the relative heading angle, in degrees;

a is the distance between the OV leading edge and the intersection of the OV and MC centre lines, in metres.

If the OV contact point is the front or rear and the MC contact point is the side, then y_{cp} is the distance, in metres, between the OV centre line and the mid-point along the overall length of the MC. See Figure 9c.

5.3.5 Dummy position verification

Use the pre-test and pre-impact top and side view images.

From the side view images, record the relative x and z positions of the dummy helmet centroid and the shoulder, hip, knee, and ankle points with respect to the motorcycle targets. From the top view images, record the relative x and y position of the dummy helmet centroid with respect to the motorcycle targets. If a portion of the motorcycle or other object obscures one or more of these points, record the positions of the remaining points.

5.4 Frangible bone continuity sensors

5.4.1 Wire mounting

Bond a continuous length of 0,17 mm ± 0,02 mm diameter magnet wire to the frangible bone with a cyanoacrylate based adhesive. Use an end-to-end wire pattern, as shown in Figure 5 which results in at least four sections of wire running the length of the bone, spaced no more than 90° from each other. An accelerant compound may be used to cure the adhesive.

Solder the two ends of the 0,17 mm wire to a multi strand wire with a total diameter of 0,49 mm ± 0,05 mm, which is terminated with a small connector. Tape the 0,49 mm wire to the bone in such a way as to protect the 0,17 mm wire.

Check continuity of each 0,17 mm wire to ensure that it was not broken during the assembly process.

5.4.2 Sensor unit

Assemble a sensor unit as shown in Figure 10. Configure reusable portion of the sensor to be compatible with the data acquisition system and the small bone connectors, described above.

Check the function of the sensor by connecting and disconnecting the various bone connectors while monitoring the output signal. Document the relationship between broken wires and the resulting signal for post test data analysis.

6 Documentation

All specification, calibration, and test data described above shall be documented in accordance with ISO 13232-8.

STANDARDSISO.COM : Click to view the full PDF of ISO 13232-4:2005

© ISO 2005 – All rights reserved

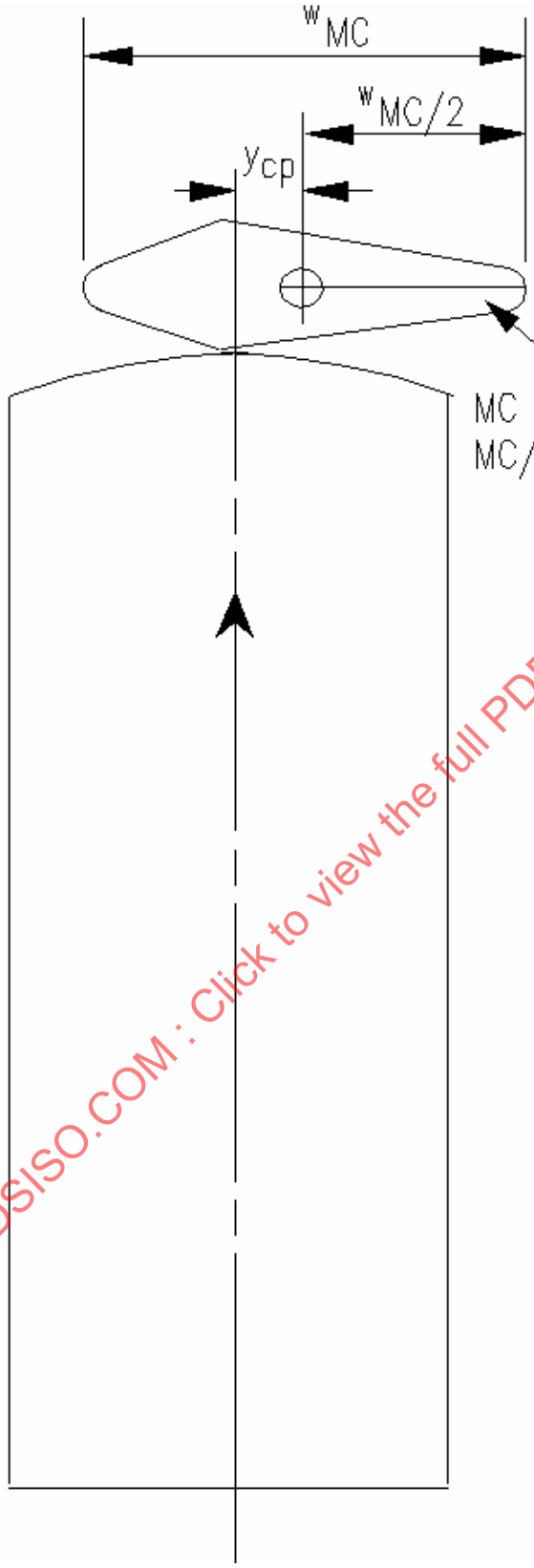

STANDARDSISO.COM : Click to view the full PDF of ISO 13232-4:2005

Figure 9c — OV contact point determination, OV front or rear contact with MC side contact (positive ycp shown)

© ISO 2005 – All rights reserved

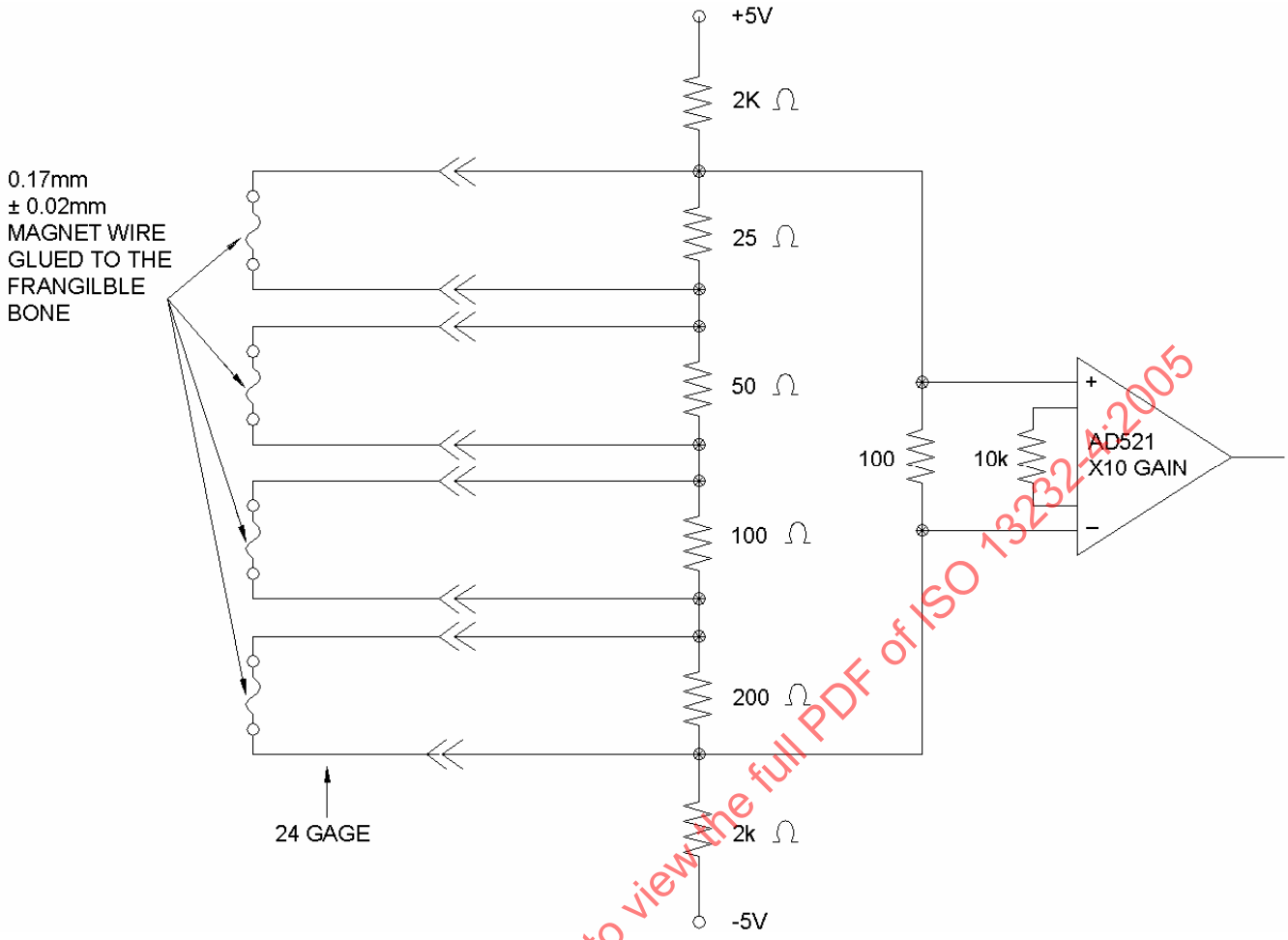

Figure 10 — Frangible bone continuity sensor circuit

STANDARDSISO.COM : Click to view the full PDF of ISO 13232-4:2005

© ISO 2005 – All rights reserved

Annex A
(normative)

Digitizing the helmet centroid point

A.1 Principle

Identification and digitization of helmet centroid point using the MC top and side view cameras.

A.2 Apparatus

Film motion analyser, as specified in 4.3.

A.3 Procedure

A.3.1 Load the film in the film analyser.

A.3.2 Set the film to the frame when first MC/OV contact occurs.

A.3.3 Overlay a transparent film on the digitizing surface.

A.3.4 Draw a circle which circumscribes the helmet as seen on the digitizing surface.

A.3.5 Mark the centre of the circle. This is the helmet centroid point.

A.3.6 For each analysis frame, centre the circle about or within the helmet, using the visible portion of the helmet outline, by moving the transparent film around on the digitizing surface.

A.3.7 Digitize the location of the circle centre mark.

STANDARDSISO.COM : Click to view the full PDF of ISO 13232-4:2005

© ISO 2005 – All rights reserved

Annex B
(normative)

High speed photography field of view requirements

B.1 Seven impact configurations for MC top and side views

For the seven impact conditions listed in Table B.1, the field of view should be as listed. For typical 16 mm high speed cameras, the minimum lens focal length should be as listed in Table B.1. If shorter lens focal lengths are used, correction for lens distortion should be done. For the fields of view and focal lengths listed in Table B.1, the film analysis intervals should be as listed in Table B.1. For other fields of view and focal lengths the film analysis interval should be as described in 5.2.4.1.

B.2 Other impact configurations and other camera views

Select the camera, lens, and camera position such that the frame width is:

$W_f = V_{x,h,p}$ X 0,600 s

where

W_f is the frame width, in metres;

$V_{x,h,p}$ is the velocity of the pre-impact dummy helmet centroid point for the MC top or side view cameras, in metres per second;

0,600 s is the amount of time that the dummy helmet centroid point should be in the field of view.

The OV pre-impact velocity is used to determine the frame width for the OV side or top view cameras.

Narrower views may be used provided that the helmet is visible at first helmet/OV contact. Select the aim point such that the helmet is visible at least 0,100 s before first MC/OV contact. Orient the camera frame such that the frame width is aligned parallel to the pre-impact motion of the helmet. Record the camera lens focal length and x, y, z location with respect to expected first MC/OV contact point and ground. The film analysis interval should be as described in 5.2.4.1.

STANDARDSISO.COM : Click to view the full PDF of ISO 13232-4:2005

© ISO 2005 – All rights reserved

Table B.1 — Photographic specifications for seven impact configurations

Configuration m/s	Camera	Recommended camera field of view		Minimum lens focal length mm	Film analysis interval frames see NOTE
		Width m	Height m		
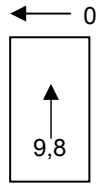	Side	8,0	5,7	25	10
	Top	8,0	5,7	13	10
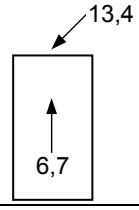	Side	8,0	5,7	25	8
	Top	8,0	5,7	13	8
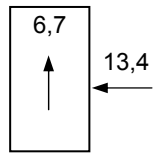	Side	9,8	5,7	25	8
	Top	8,0	5,7	13	8
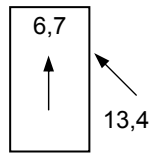	Side	8,0	5,7	25	8
	Top	8,0	5,7	13	8
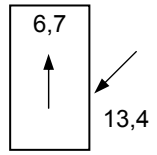	Side	8,0	5,7	25	8
	Top	8,0	5,7	13	8
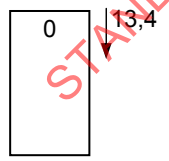	Side	8,0	5,7	25	8
	Top	8,0	5,7	13	8
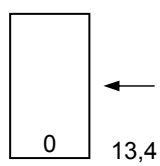	Side	8,0	5,7	25	8
	Top	8,0	5,7	13	8

NOTE If the camera frame rate is not 1000 fps, multiply the given film analysis interval by ratio of the frame rate to 1000.

STANDARDSISO.COM : Click to view the full PDF of ISO 13232-4:2005

© ISO 2005 – All rights reserved

Annex C
(normative)

Computer code for calculation of head linear and angular accelerations

A computer program which calculates the values of $a_{x,H}$, $a_{y,H}$, and $a_{z,H}$, and $\alpha_{x,H}$, $\alpha_{y,H}$, and $\alpha_{z,H}$ given the nine head linear accelerations measured over time. The input head accelerations include those listed in 4.1.1.

```
1> c...+....1....+....2....+....3....+....4....+....5....+....6....+....7....+....8
2>
3>      program xa9proc
4>
5> c*********************************************************************************
6> c
7> c     name
8> c
9> c      xa9proc
10> c
11> c     purpose
12> c
13> c      this program calculates the translational and angular
14> c      acceleration of the head from the 9 measured accelerations
15> c
16> c*********************************************************************************
17>
18>      implicit none
19>
20>      integer jtime
21>      parameter (jtime=3001)
22>
23>      integer stdin, stdout, stderr
24>      parameter (stdin=5, stdout=6, stderr=0)
25>
26>      integer k, ktime, ksen
27>      integer ntime
28>      real aahat(3,jtime), avhat(3,jtime), tahat(3,jtime)
29>      real asen(9,jtime), dt, mps2pg
30>
31>      data dt/0.0001/, mps2pg/9.81456/
32> c
33> c     read filtered sensor data in g's and convert to m/sec^2
34> c
35>      ntime = 0
36>      do ktime=1,jtime
37>        read(stdin,*,end=10) (asen(ksen,ktime),ksen=1,9)
38>        do ksen=1,9
39>          asen(ksen,ktime) = mps2pg*asen(ksen,ktime)
40>        end do
41>        ntime = ktime
42>      end do
43>    10 continue
44> c
45> c     calculate translational and angular accelerations from the
46> c     9 measured accelerations
```

STANDARDSISO.COM : Click to view the full PDF of ISO 13232-4:2005

© ISO 2005 – All rights reserved

```
47> c
48> c     note array asen will be overwritten
49> c
50>       call a9proc(tahat,aahat,avhat, asen,asen,ntime,dt)
51> c
52> c     print out head accelerations and compute error statistics
53> c       linear acceleration is in g's
54> c       angular acceleration is in rad/sec^2
55> c
56>       do ktime=1,ntime
57>         write(stdout,101) ktime,(tahat(k,ktime)/mps2pg,k=1,3),
58>      &                        (aahat(k,ktime),k=1,3)
59>       end do
60>
61>       stop
62>
63>    101 format(i5,2(2x,4f9.2))
64>
65>       end
66>
67> c...+....1....+....2....+....3....+....4....+....5....+....6....+....7....+....8
68>
69>
70>
71>
72>
73> c...+....1....+....2....+....3....+....4....+....5....+....6....+....7....+....8
74>
75>       subroutine a9proc(tahat,aahat,avhat, asen,acg,ntime,dt)
76>       integer jsen
77>       parameter (jsen=9)
78>       integer ntime
79>       real tahat(3,ntime), aahat(3,ntime), avhat(3,ntime)
80>       real asen(jsen,ntime), acg(jsen,ntime), dt
81>
82> c*******************************************************************************
83> c
84> c     name
85> c
86> c       a9proc - process 9 measured head accelerations
87> c
88> c     description
89> c
90> c       This subroutine calculates the translational and angular head
91> c       accelerations from the 9 accelerometer data channels.
92> c
93> c     calling sequence
94> c
95> c       argument  i/o  description
96> c       --------  ---  -----------
97> c        tahat     o   translational acceleration of the head c.g. (m/sec^2)
98> c                      where tahat(i,k) is the ith acceleration component,
99> c                        i=1 - body x axis
100> c                          2 - body y axis
101> c                          3 - body z axis
102> c                      at the kth sample time, k=1 to ntime
103> c
104> c        aahat     o   angular acceleration of the head (rad/sec^2)
105> c                      storage is the same as tahat
106> c
```

STANDARDSISO.COM : Click to view the full PDF of ISO 13232-4:2005

© ISO 2005 – All rights reserved

```
107> c       avhat     o   angular velocity of the head (rad/sec)
108> c                 storage is the same as tahat
109> c
110> c       asen      i   measured accelerations (m/sec^2)
111> c                 where asen(j,k) is the acceleration measured by
112> c                 the jth sensor at the kth sample time.
113> c                   j=1 - 'Y1' sensor
114> c                     2 - 'Y3' sensor
115> c                     3 - 'Y2' sensor
116> c                     4 - 'X1' sensor
117> c                     5 - 'X2' sensor
118> c                     6 - 'X3' sensor
119> c                     7 - 'Z1' sensor
120> c                     8 - 'Z2' sensor
121> c                     9 - 'Z3' sensor
122> c       acg       o   measured accelerations at the c.g. (m/sec^2)
123> c                 storage may be the same as asen if contents of asen are not needed on return
124> c
125> c       ntime     i/o  number of time samples
126> c
127> c       dt        i   time interval between samples (sec)
128> c
129> c     version history
130> c       - original version by RMV, DRI, Dec 1993
131> c       - first revision by RMV, DRI, May 1994
132> c         - change accelerometer location and orientation data
133> c         - minor comment changes
134> c       - second revision by RMV, DRI, Nov 1994
135> c         - zero out angular velocity terms in the calculation of the
136> c           head c.g. translational acceleration
137> c
138> c*******************************************************************************
139> c
140> c     local variables
141> c
142>       integer*2 iaa(3), iav(3), iov(3), ieu(3), iy(3), iq(4), ip(3)
143>       integer nrec, nstart, nfinis, ndecim, ispec(7), iacc
144>       real acrec(0:22), deltim
145>       real rsen(3,jsen), xsen(jsen), ysen(jsen), zsen(jsen)
146>       real wxr(3), r(3)
147> c
148> c     sensor data
149> c
150>       data nsen/jsen/
151>       data (xsen(ksen),ysen(ksen),zsen(ksen),ksen=1,jsen)/
152>      &    -0.70710678118, 0.70710678118, 0.0,       ! Y1
153>      &    -0.70710678118, 0.70710678118, 0.0,       ! Y3
154>      &    -0.70710678118, 0.70710678118, 0.0,       ! Y2
155>      &    -0.70710678118,-0.70710678118, 0.0,       ! X1
156>      &    -0.70710678118,-0.70710678118, 0.0,       ! X2
157>      &    -0.70710678118,-0.70710678118, 0.0,       ! X3
158>      &     0.0         , 0.0         , 1.0,       ! Z1
159>      &     0.0         , 0.0         , 1.0,       ! Z2
160>      &     0.0         , 0.0         , 1.0/       ! Z3
161>
162>       data rsen/ -0.00521,  0.00523,  0.00000,    ! Y1
163>      &           0.02350,  0.03394,  0.00000,    ! Y3
164>      &          -0.00521,  0.00523, -0.04060,    ! Y2
165>      &          -0.00521, -0.00523,  0.00000,    ! X1
166>      &           0.02350, -0.03394,  0.00000,    ! X2
```

STANDARDSISO.COM : Click to view the full PDF of ISO 13232-4:2005

© ISO 2005 – All rights reserved

```
167>     &         -0.00521, -0.00523, -0.04060,    ! X3
168>     &          0.00002,  0.00000,  0.00740,    ! Z1
169>     &          0.02873,  0.02871,  0.00740,    ! Z2
170>     &          0.02873, -0.02871,  0.00740/    ! Z3
171>
172>      data iaa, iav, iov, ieu, iy, iq, ip/22*0/
173> c
174> c     write acceleration data to accel input file
175> c
176>      deltim = dt*1.0e6
177>      open(8,file='DEC.OUT',recl=88,access='direct')
178>      write(8,rec=1) ntime,deltim,nstart,nfinis,ndecim,ispec,iacc
179>      do ktime=1,ntime
180>        write(8,rec=ktime+1) (asen(ksen,ktime),ksen=1,nsen)
181>      end do
182>      close(8)
183> c
184> c     call accel subroutine to get angular acceleration and velocity
185> c
186>      call accel
187> c
188> c     read acceleration data from accel output file
189> c
190> open(7,file='AC.OUT',recl=88,access='direct')
191>      read(7,rec=1) ntime,deltim,nstart,nfinis,ndecim,ispec,iacc
192> c
193> c     reconstruct record pointers
194> c
195>      nvars = 0
196>      if(ispec(1).gt.0) call setrec(idum, 1, iaa, 3, nvars)
197>      if(ispec(2).gt.0) call setrec(idum, 1, iav, 3, nvars)
198>      if(ispec(3).gt.0) call setrec(idum, 1, iov, 3, nvars)
199>      if(ispec(4).gt.0) call setrec(idum, 1, ieu, 3, nvars)
200>      if(ispec(5).gt.0) call setrec(idum, 1, iy , 3, nvars)
201>      if(ispec(6).gt.0) call setrec(idum, 1, iq , 4, nvars)
202>      if(ispec(7).gt.0) call setrec(idum, 1, ip , 3, nvars)
203> c
204> c     calculate -135 deg cube rotation
205> c
206>      crot = -sqrt(0.5)
207>      srot = crot
208> c
209> c     get angular acceleration and velocity from the accel subroutine
210> c
211>      do ktime=1,ntime
212>
213>       read(7,rec=ktime+1) (acrec(k),k=1,nvars)
214> c
215> c       get angular acceleration in body coordinates
216> c
217>        aahat(1,ktime) = crot*acrec(iaa(1))+srot*acrec(iaa(2))
218>        aahat(2,ktime) =-srot*acrec(iaa(1))+crot*acrec(iaa(2))
219>        aahat(3,ktime) = acrec(iaa(3))
220> c
221> c       get angular velocity in body coordinates
222> c
223>        avhat(1,ktime) = crot*acrec(iav(1))+srot*acrec(iav(2))
224>        avhat(2,ktime) =-srot*acrec(iav(1))+crot*acrec(iav(2))
225>        avhat(3,ktime) = acrec(iav(3))
226> c
```

STANDARDSISO.COM : Click to view the full PDF of ISO 13232-4:2005

© ISO 2005 – All rights reserved

```
227> c      the following three executable statements zero out the
228> c      estimated angular velocity which is used to calculate the
229> c      translational acceleration of the head c.g.
230> c
231>        avhat(1,ktime) = 0.0
232>        avhat(2,ktime) = 0.0
233>        avhat(3,ktime) = 0.0
234>
235>      end do
236>
237>      close(7)
238> c
239> c     correct each measured acceleration for sensor location relative
240> c     to the head c.g.
241> c
242>      do ksen=1,nsen
243>        r(1) = rsen(1,ksen)
244>        r(2) = rsen(2,ksen)
245>        r(3) = rsen(3,ksen)
246>        do ktime=1,ntime
247>          wxr(1) = avhat(2,ktime)*r(3) - avhat(3,ktime)*r(2)
248>          wxr(2) = avhat(3,ktime)*r(1) - avhat(1,ktime)*r(3)
249>          wxr(3) = avhat(1,ktime)*r(2) - avhat(2,ktime)*r(1)
250>
251>          dot = xsen(ksen)*(
252>     &                aahat(2,ktime)*r(3) - aahat(3,ktime)*r(2)
253>     &              + avhat(2,ktime)*wxr(3) - avhat(3,ktime)*wxr(2) )
254>     &          + ysen(ksen)*(
255>     &                aahat(3,ktime)*r(1) - aahat(1,ktime)*r(3)
256>     &              + avhat(3,ktime)*wxr(1) - avhat(1,ktime)*wxr(3) )
257>     &          + zsen(ksen)*(
258>     &                aahat(1,ktime)*r(2) - aahat(2,ktime)*r(1)
259>     &              + avhat(1,ktime)*wxr(2) - avhat(2,ktime)*wxr(1) )
260>          acg(ksen,ktime) = asen(ksen,ktime) - dot
261>        end do
262>      end do
263>
264>      do ktime=1,ntime
265> c
266> c      get the translational acceleration of the head c.g. in body
267> c      coordinates
268> c
269>        tahat(1,ktime) = crot*acg(1,ktime)+srot*acg(4,ktime)
270>        tahat(2,ktime) =-srot*acg(1,ktime)+crot*acg(4,ktime)
271>        tahat(3,ktime) = acg(7,ktime)
272>
273>      end do
274>
275>      return
276>
277>      end
278>
279> c...+....1....+....2....+....3....+....4....+....5....+....6....+....7....+....8
280>
281>
282>
283>
284>
285>       SUBROUTINE ACCEL
286> C*********************************************************************
```

STANDARDSISO.COM : Click to view the full PDF of ISO 13232-4:2005

© ISO 2005 – All rights reserved

```
C     THIS IS THE 9-ACCELEROMETER DATA REDUCTION PROGRAM
C     IT READS A NAMED PARAMETER FILE FOR RUN PARAMETERS
C     AND A RANDOM-ACCESS DATA FILE
C
C     THE ORIGINAL PROGRAM WAS PROVIDED BY DCIEM ( TIM BOWDEN )
C
C     Modified by R. Lucas of Demac Software Ltd. to run on RSX
C     (17-OCT-85)
C
C     Modifi par Alain Caron,ing le 4 juin 1986 pour permettre
C     nos canaux d'tre lus adquatement en plus de le rendre
C     un peu plus "user-friendly"
C
C*************************************************************************
C     Dans la dernire version:
C           1) Plus besoin de donner le nom du fichier cr par
C              FILDEC
C           2) Prvenir un danger d'overflow
C*************************************************************************
C
C     Modifi par Patrick Lemieux,tudiant en juillet 87 pour permettre
C     au programme de fonctionner avec FILDEC et UNDECI a l'intrieur
C     du mme programme et sous forme de "PULL DOWN MENU"
C
C   Modified by Mike Van Auken of DRI, December 1993
C    - Removed VAX unique FORTRAN
C    - Changed sign of R() to account for location of sensors
C      on cube
C    - Changed angular acceleration integration coefficients to
C      Adams 3-point corrector
C    - Removed linear acceleration calculations
C    - minor bug corrections
      integer bell
      PARAMETER (BELL=7)
      BYTE PRGNAM(6), MCRLIN(80)
      BYTE FIL1(26), FIL2(26), FIL3(26), FIL4(26),NOWRAP(2)
      INTEGER PRL(6)
      INTEGER ISPEC(7), OPT(4,3)
      INTEGER*2 IAA(3), IAV(3), IOV(3), IEU(3), IY(3), IQ(4), IP(3)
      REAL*4 A(9)
      REAL*4 OUTREC(22), PRVREC(22)
      REAL*4 CRB(3,3), EUL(3), YPR(3), ORVEC(3)
      REAL*4 DW(3), W(3), OINIT(3), R(6)
      REAL*4 DERIV(3), AC1(3), AC2(3), AC3(3)
      REAL*4 PHI(3), PHIDEG(3), AV1(3), AV2(3), AV3(3)
      REAL*4 D(3,3), D1(3,3), QC(4), RC(4)
C
C++++++++++++++++++++++++++++++++++++++++++++++++++++++++++++++++++++++++++++
C           Ce qui correspond nos canaux suivants:
C
C                    ____________________________X?= X a l'origine
C                   /          ______________X?= X sur l'axe Y
C                  /          /          ___X?= X sur l'axe Z
C                 /          /          /
      EQUIVALENCE (A(1), AX0), (A(2), AX1), (A(3), AX3)
C
C                    ____________________________Y?= Y a l'origine
C                   /          ______________Y?= Y sur l'axe X
C                  /          /          __Y?= Y sur l'axe Z
```

STANDARDSISO.COM : Click to view the full PDF of ISO 13232-4:2005

© ISO 2005 – All rights reserved

```
347> C                    /          /          /
348>       EQUIVALENCE (A(4), AY0), (A(5), AY2), (A(6), AY3)
349> C
350> C                              _____________________________Z?= Z a l'origine
351> C                             /                 _____________Z?= Z sur l'axe Y
352> C                            /          /          __Z?= Z sur l'axe X
353> C                           /          /          /
354>       EQUIVALENCE (A(7), AZ0), (A(8), AZ1), (A(9), AZ2)
355> C++++++
```

```
C-----------------------------------------------------------------------
C----Il y a eu un erreur durant l'ouverture du fichier
C
30     CALL CLRLIN(6,22)
       CALL LOCATE(3,1,' ')          ! Pour θcrire sur la ligne 12
       print 6001,BELL               ! Ecrire le message d'erreur
       WRITE (6,9099)                ! Message d'erreur pour le rapport
       STOP 'ACCEL avorte'
C-----------------------------------------------------------------------
C----Le fichier de sortie de ACCEL et l'ouvrir
C
1033   CONTINUE
       OPEN (UNIT=7, file='AC.OUT', status='unknown',
     :  recl=88, ACCESS='DIRECT', ERR=40)
       GOTO 1011
40     CALL IERMSG(PRGNAM,'F','Manque de memoire.     ')
C-----------------------------------------------------------------------
C----Re-ouvrir le fichier resultant de FILDEC cette fois-ci avec le bon
C    nombre de records.
C
1011   OPEN (UNIT=8, file='DEC.OUT', status='OLD',
     :     recl=88, ACCESS='DIRECT', ERR=30)
C-----------------------------------------------------------------------
C----Initialiser les parametres supplementaires et necessaires a ACCEL
C
       DO 1212 II=1,6
1212      R(II)=-0.0406                 ! Longueur des bras (metre)
C
       OINIT(1)=0.0
       OINIT(2)=0.0
       OINIT(3)=45.0                 ! Orientation init. des axes
C-----------------------------------------------------------------------
C----Les diffrents calculs  faire
C
       IANGAC=1
IANGVL=1
       IORVEC=1
       IEULER=0
       IYPR=0
       IQUAT=0
       IPACC=0
C
       NVARS = 0
C-----------------------------------------------------------------------
C----Identifier les variables de sortie
C
       CALL SETREC (ISPEC(1), IANGAC, IAA, 3, NVARS)
       CALL SETREC (ISPEC(2), IANGVL, IAV, 3, NVARS)
       CALL SETREC (ISPEC(3), IORVEC, IOV, 3, NVARS)
       CALL SETREC (ISPEC(4), IEULER, IEU, 3, NVARS)
       CALL SETREC (ISPEC(5), IYPR, IY, 3, NVARS)
       CALL SETREC (ISPEC(6), IQUAT, IQ, 4, NVARS)
       CALL SETREC (ISPEC(7), IPACC, IP, 3, NVARS)
C-----------------------------------------------------------------------
C----Nous avons termin avec les paramΦtres d'entre. crivons le
C    premier record du fichier de sortie
C
       WRITE (7,rec=1) NREC, DELTIM, NSTART, NFINIS, NDECIM, ISPEC,IACC
C-----------------------------------------------------------------------
C----Ouvrir un fichier temporaire
```

STANDARDSISO.COM : Click to view the full PDF of ISO 13232-4:2005

© ISO 2005 – All rights reserved

```
C
      OPEN (UNIT=1, status='SCRATCH',
     :  recl=56, ACCESS='DIRECT', ERR=60)
      GOTO 70
60     CALL IERMSG (PRGNAM,'F','Manque de memoire tampon.    ')
C-------------------------------------------------------------------
C---Convertir DELTIM en seconde
C
70     DT = 0.000001 * DELTIM
C-------------------------------------------------------------------
C----Transcrire les parametres d'entree dans le fichier rapport
C
      CALL ECHO (ILOG, NREC, NSTART, NFINIS, NDECIM,
     :      DT, NVARS, FIL1, FIL3, FIL4)
C-------------------------------------------------------------------
C----Ecrire un message a l'ecran pour signifier l'operation en cour
C
      CALL CLRLIN(6,22)
      CALL LOCATE(3,1,' ')              ! Pour crire sur la ligne 12
      print 772
C-------------------------------------------------------------------
C----Multiplier la longueur des bras par 2
C
      DO 27 I = 1, 6
27       R(I) = 2. * R(I)
C-------------------------------------------------------------------
C----Initialiser les accelerations et vitesses angulaires
C
      DWX = 0.0
      DWY = 0.0
      DWZ = 0.0
      DO 14 I = 1, 9
14       A(I) = 0.0                  ! Les accelerations
      DO 15 I = 1, 3
        W(I) = 0.0                   ! Les vitesses
        DERIV(I) = 0.0
        ORVEC(I) = OINIT(I)          ! Orientation init des vecteurs.
15     YPR(I) = 0.0
C-------------------------------------------------------------------
C----Commencons l'integration pour obtenir les vitesses angulaires
C
      DO 12 I = 2, NREC + 1
        MREC = I -1
        EPOCH = (MREC - 1)*DT
        READ (8,rec=I) A
C-------------------------------------------------------------------
C----Convertir les donnees en accelerations angulaires
C
        DWX = (AZ1 - AZ0)/RY3 - (AY3 - AY0)/RZ2
        DWY = (AX3 - AX0)/RZ1 - (AZ2 - AZ0)/RX3
        DWZ = (AY2 - AY0)/RX1 - (AX1 - AX0)/RY2
C-------------------------------------------------------------------
C----Inscrire ces nouveau resultats dans le fichier temporaire
C
        WRITE (1,rec=MREC) EPOCH, DW
C-------------------------------------------------------------------
C----Ecrire l'acceleration angulaire si necessaire
C
        IF (IANGAC .LE. 0) GOTO 12
        CALL FILREC (OUTREC, IAA, 3, DW)
```

STANDARDSISO.COM : Click to view the full PDF of ISO 13232-4:2005

© ISO 2005 – All rights reserved

```
527>          WRITE (7,rec=I) OUTREC
528> 12      CONTINUE
529> C-------------------------------------------------------------------
530> C----Fermer le fichier de donnees
531> C
532>        CLOSE (UNIT=8)
533> C-------------------------------------------------------------------
534> C----Relire l'acceleration angulaire pour l'integrer a faire d'obtenir
535> C    la vitesse angulaire. A ce point-ci le fichier temporaire contient
536> C    le nombre d'echantillons, l'acceleration angulaire et l'acceleration
537> C    a l'origine.
538> C
539>        WRITE (ILOG,600)                    ! Inscrire 1 ligne blanche
540>        CALL CLRLIN(6,22)
541>        CALL LOCATE(3,1,' ')                ! Pour crire sur la ligne 12
542>        print 773                         ! Afficher le message de l'op.
543>        DO 24 MREC = 1, NREC
544>          I = MREC + 1
545>          IF (MREC - 2) 41, 42, 43          ! Traiter le 1e,2e ou 3e
546> C-------------------------------------------------------------------
547> C----Le premier record
548> C
549> 41         READ (1,rec=MREC) EPOCH, AC3
550>          DO 44 J = 1, 3
551> 44         W(J) = 0.
552>          GOTO 38
553> C-------------------------------------------------------------------
554> C----Le second record
555> C
556> 42         DO 45 J = 1, 3
557> 45             AC2(J) = AC3(J)
558>          READ (1,rec=MREC) EPOCH, AC3
559>          DO 46 J = 1, 3
560> 46             W(J) = W(J) + DT * (AC2(J) + AC3(J))/2.
561>          GOTO 38
562> C-------------------------------------------------------------------
563> C----Les records suivants
564> C
565> 43         DO 47 J = 1, 3
566>              AC1(J) = AC2(J)
567> 47         AC2(J) = AC3(J)
568>          READ (1,rec=MREC) EPOCH, AC3
569>          DO 48 J = 1, 3
570> 48             W(J) = W(J) + DT * (-AC1(J) + 8.*AC2(J) + 5.*AC3(J))/12.
571> C-------------------------------------------------------------------
572> C----Garder ce resultat intermediaire  dans le fichier temporaire
573> C
574> 38         continue
575>          WRITE (1,rec=MREC) EPOCH, W
576> C-------------------------------------------------------------------
577> C----Inscrire les vitesses angulaires si demandees
578> C
579>          IF (IANGVL .LE. 0) GO TO 24
580>          READ (7,rec=I) OUTREC
581>          CALL FILREC (OUTREC, IAV, 3, W)
582>          WRITE (7,rec=I) OUTREC
583> 24       CONTINUE
584>        WRITE (ILOG,600)
585> C-------------------------------------------------------------------
586> C----A ce point-ci le fichier temporaire contient le nombre
```

STANDARDSISO.COM : Click to view the full PDF of ISO 13232-4:2005

© ISO 2005 – All rights reserved

```
C    d'echantillons, les vitesses angulaires el les accelerations
C    non-transformees au point P et l'integration des vitesses angulaires
C    pour avoir la rotation.
C
 37     CALL CLRLIN(6,22)
        CALL LOCATE(3,1,' ')                ! Pour crire sur la ligne 12
        print 774
        CALL CRBMAT (YPR, D1)                ! Calculer la mat. de transform.
        CALL CRBMAT (YPR, D)
        CALL QUATER (D, QC, RC)              ! Calculer les quaternions
        CALL EULDEG (D, EUL)                ! Les modules d'EULER
        CALL YPRDEG (D, YPR)                ! Le Yaw, Pitch et Roll
C-------------------------------------------------------------------------
C----Initialisation des variables ( canaux ) de sortie
C
        READ (7,rec=2) OUTREC
        IF (IORVEC .GT. 0) CALL FILREC (OUTREC, IOV, 3, OINIT)
        IF (IEULER .GT. 0) CALL FILREC (OUTREC, IEU, 3, EUL)
        IF (IYPR .GT. 0) CALL FILREC (OUTREC, IY, 3, IYPR)
        IF (IQUAT .GT. 0) CALL FILREC (OUTREC, IQ, 4, RC)
        READ (1,rec=1) EPOCH, DW
        WRITE (7,rec=2) OUTREC
        WRITE (ILOG, 610,ERR=900) D
        WRITE (ILOG, 606,ERR=900) EPOCH, EUL
        WRITE (ILOG, 607,ERR=900) EPOCH, YPR
        WRITE (ILOG, 608,ERR=900) EPOCH, RC
 32     DO 33 I = 1, 3
 33       PHI(I) = 0.
C=========================================================================
C----Ici debute la boucle d'integration
C
        DO 59 MREC = 1, NREC - 2, 2
C-------------------------------------------------------------------------
C----Lire les vitesses angulaires et l'acceleration au point P, du
C    fichier temporaire.
C
          READ (1,rec=MREC) EPOCH1, AV1
          READ (1,rec=(MREC + 1)) EPOCH2, AV2
          IF (MREC + 2 .GT. NREC) GO TO 35
          READ (1,rec=(MREC + 2)) EPOCH3, AV3
          GO TO 36
 35       READ (1,rec=(MREC + 1)) EPOCH3, AV2
C-------------------------------------------------------------------------
C----Integrer la vitesse angulaire pour obtenir la rotation
C
 36       CALL RK (PHI, AV1, AV2, AV3, DERIV, DT)     ! Integ. Runge-Kutta
          IF (MREC.EQ.1.OR.MREC.EQ.1001.OR.MREC.EQ.2001) THEN
            WRITE (ILOG, 614,ERR=900) PHI         ! L'orientation du
          ENDIF
C                                     ! vecteur de Mital &
C                                     ! King.
          CALL CRBMAT (PHI, CRB)                  ! Matrice CRB i.e...
C                                     ! matrice de transform.
          IF (MREC.EQ.1.OR.MREC.EQ.1001.OR.MREC.EQ.2001) THEN
            WRITE (ILOG, 615,ERR=900) CRB
          ENDIF
          CALL UPDATE (PHI, CRB, DERIV, D1, D, QC, RC) ! Mettre la mat D a
C                                     ! date.
          IF (MREC.EQ.1.OR.MREC.EQ.1001.OR.MREC.EQ.2001) THEN
            WRITE (ILOG, 1610,ERR=900) D
```

STANDARDSISO.COM : Click to view the full PDF of ISO 13232-4:2005

© ISO 2005 – All rights reserved

```
647>          ENDIF
648>          DO 34 J = 1, 3
649> 34         ORVEC(J) = OINIT(J) + PHI(J)
650>          CALL EULDEG (D, EUL)                    ! Calcul d'Euler
651>          CALL YPRDEG (D, YPR)                    ! Calcul de Yaw,Pitch,
652> C                                        ! et de Roll
653>          DO 51 J = 1, 3
654> 51         PHIDEG(J) = RTOD * ORVEC(J)
655>          IF (MREC.EQ.1.OR.MREC.EQ.1001.OR.MREC.EQ.2001) THEN
656>             WRITE (ILOG,605,ERR=900) EPOCH3, PHIDEG
657>          ENDIF
658> C-------------------------------------------------------------------
659> C----Lire le record precedent
660> C
661>          READ (7,rec=(MREC + 2)) PRVREC
662> C-------------------------------------------------------------------
663> C----Garder sa valeur au carre dans un endroit inutilise
664> C
665>          NFIRST = ISPEC(1) + ISPEC(2) + 1
666>          DO 52 J = NFIRST, NVARS
667> 52         PRVREC(J) = OUTREC(J)
668> C-------------------------------------------------------------------
669> C----Lire le record courant et inserer la rotation si necessaire
670> C
671>          READ (7,rec=(MREC + 3)) OUTREC
672>          IF (IORVEC .GT. 0) CALL FILREC (OUTREC, IOV, 3, ORVEC)! Orientation
673>          IF (MREC.EQ.1.OR.MREC.EQ.1001.OR.MREC.EQ.2001) THEN
674>             WRITE (ILOG, 606,ERR=900) EPOCH3, EUL
675>          ENDIF
676>          IF (IEULER .GT. 0) CALL FILREC (OUTREC, IEU, 3, EUL) ! Euler
677>          IF (MREC.EQ.1.OR.MREC.EQ.1001.OR.MREC.EQ.2001) THEN
678>             WRITE (ILOG, 607,ERR=900) EPOCH3, YPR
679>          ENDIF
680>          IF (IYPR .GT. 0) CALL FILREC (OUTREC, IY, 3, YPR)    ! Yaw,Pitch,Roll
681>          IF (MREC.EQ.1.OR.MREC.EQ.1001.OR.MREC.EQ.2001) THEN
682>             WRITE (ILOG, 608,ERR=900) EPOCH3, RC
683>          ENDIF
684>          IF (IQUAT .GT. 0) CALL FILREC (OUTREC, IQ, 4, RC)    ! Quaternions
685> C-------------------------------------------------------------------
686> C----Interpolation pour evaluer la rotation du record precedent
687> C
688>          DO 53 J = NFIRST, NVARS
689> 53          PRVREC(J) = 0.5 * (PRVREC(J) + OUTREC(J))
690> C-------------------------------------------------------------------
691> C     WRITE PREVIOUS AND CURRENT RECORDS
692> C
693>          WRITE (7,rec=(MREC + 2)) PRVREC
694>          WRITE (7,rec=(MREC + 3)) OUTREC
695> 59     CONTINUE
696>C=================================================    ======================
697> C----Fin de la boucle d'integration
698> C
699>       WRITE (ILOG,600)
700>       CALL CLRLIN(6,22)
701>       CALL LOCATE(3,1,' ')              ! Pour ecrire sur la ligne 12
702>       print 776,BELL                    ! Operation terminee
703>       CLOSE (UNIT=1)
704>       CLOSE (UNIT=7)
705> C      CLOSE(UNIT=ILOG)
706>       CALL DELAIS(2.0)
```

STANDARDSISO.COM : Click to view the full PDF of ISO 13232-4:2005

© ISO 2005 – All rights reserved

```
      RETURN
C-------------------------------------------------------------------------
C----S'il y un erreur de format du type 63 alors afficher le message
C----explicatif.
C
900   CALL CLRLIN(6,22)
      CALL LOCATE(3,1,' ')              ! Pour ecrire sur la ligne 12
      print 601,BELL
      CALL KEY(NEWDIR)
      OPEN (UNIT=2, file='DEC.OUT', status='OLD',
     :  recl=88, ACCESS='DIRECT', ERR=30)
      CLOSE (UNIT=2,status='DELETE')
      CLOSE (UNIT=7,status='DELETE')
      RETURN
C-------------------------------------------------------------------------
C----Les formats
600   FORMAT(' ')
601   FORMAT(7(/),18X,A1,'Il est inutile de continuer, puisque durant',
     :       /,18x'le calcul un point extreme a t obtenu.',
     :       /,' ',
     :       /,18x'Les fichiers  AC.OUT  et  DEC.OUT  ont  t',
     :       /,18x'detruits')
605   FORMAT (/'       ',F8.4,3X,' Orientation du vecteur:',3F10.3)
606   FORMAT ('       ',F8.4,3X,' Angles d''EULER       :',3F10.3)
607   FORMAT (' Temps= ',F8.4,3X,' Yaw, Pitch, Roll     :',3F10.3)
608   FORMAT ('       ',F8.4,3X,' Quaternions          :',4F10.3)
610   FORMAT (' Matrice D :',3(/20X,3F12.4))
614   FORMAT ('                PHI              :',3F10.4)
615   FORMAT (/' Matrice CRB: ',3(/20X,3F12.4))
772   FORMAT (9(/),23x'Calcul des accelerations angulaires.')
773   FORMAT (9(/),20x' Integration des accelerations angulaires')
774   FORMAT (9(/),22x' Integration des vitesses angulaires')
776   FORMAT (9(/),25x,A1,' Operation terminee pour ACCEL')
1101   FORMAT('              ACCEL          ')
1610   FORMAT (/' Nouvelle matrice D :',3(/20X,3F12.4))
c4001   FORMAT (Q, 26A1)
4002   FORMAT (L1)
5001   FORMAT (9(/),24X' Fichier cree par FILDEC ?:',$)
5002   FORMAT (9(/),20X' Nom a donner au fichier de sortie ?:',$)
6001   FORMAT(9(/),10X,A1,'ERR: Il manque le fichier DEC.OUT, refaire',
     :' FILDEC.')
9099   FORMAT(10X,'Avortement durant ACCEL, il manque FILDEC ???')
      END


      SUBROUTINE CRBMAT (FP, CRBT)
      DIMENSION FP(3), CRB(3,3), CRBT(3,3)
C
FX = FP(1)
      FY = FP(2)
      FZ = FP(3)
C
      FXX = FX * FX
      FYY = FY * FY
      FZZ = FZ * FZ
      FXY = FX * FY
      FYZ = FY * FZ
```

STANDARDSISO.COM : Click to view the full PDF of ISO 13232-4:2005

© ISO 2005 – All rights reserved

```
      FZX = FZ * FX
      FF = FXX + FYY + FZZ
      F = SQRT(FF)
      CF = COS(F)
      SF = SIN(F)
      VCF = 1. - CF
C
      FFX = F * FX
      FFY = F * FY
      FFZ = F * FZ
C
      CRB(1,1) = FXX + (FF - FXX)*CF
      CRB(1,2) = FXY*VCF - FFZ*SF
      CRB(1,3) = FZX*VCF + FFY*SF
      CRB(2,1) = FXY*VCF + FFZ*SF
      CRB(2,2) = FYY + (FF - FYY)*CF
      CRB(2,3) = FYZ*VCF - FFX*SF
      CRB(3,1) = FZX*VCF - FFY*SF
      CRB(3,2) = FYZ*VCF + FFX*SF
      CRB(3,3) = FZZ + (FF - FZZ)*CF
C
      IF (FF .LE. 0.) GO TO 2
      DO 1 I = 1, 3
      DO 1 J = 1, 3
      CRB(I,J) = CRB(I,J) / FF
1      CRBT(J,I) = CRB(I,J)
      RETURN
C
2      DO 3 I = 1, 3
      DO 4 J = 1, 3
4      CRBT(I,J) = 0.
3      CRBT(I,I) = 1.
      RETURN
      END


C     CROSS PRODUCT OF TWO VECTORS
C
      SUBROUTINE CROSS (A, B, C)
C
      REAL*4 A(3), B(3), C(3)
C
      DO 1 I = 1, 3
      J = MOD(I, 3) + 1
      K = MOD(J, 3) + 1
1      C(I) = A(J)*B(K) - A(K)*B(J)
      RETURN
      END


     SUBROUTINE ECHO (ILOG, NREC, NF, NL, ND, DELTIM, NV,
     :                FILE1, FILE3, FILE4)
C
C     PRINT CONTENTS OF PARAMETER FILE IF DESIRED
```

STANDARDSISO.COM : Click to view the full PDF of ISO 13232-4:2005

© ISO 2005 – All rights reserved

```
C      Modified by T. Bowden, 4 Jun 1985, to output to only one device
C      or file.
C      Modified by R. Lucas, 17-OCT-85 to run on RSX
C            major change is that file names are passed in
C
C      Modifie par A. Caron,ing le 9-juin-86 : Mettre les commentaires
C            en francais
C
C     Argument list for echo:
C
C         ILOG specifies ouptut
C         NREC is the number of data records in the input file
C         NF is the first record number
C         NL is the last record number
C         ND is the decimation factor
C         DELTIM is the time step in microsec
C         NV is the total number of output variables
C         FILE1 - 4 are file names
C
      BYTE FILE1(26), FILE3(26), FILE4(26)
      BYTE DATSTR(9), TIMSTR(8)
      INTEGER*2 SPEC(39)
      INTEGER*2 IAA(3), IAV(3), IOV(3), IEU(3), IY(3), IQ(4), IP(3)
      REAL*4 R(6), P(3), OINIT(3)
C
      COMMON /PARAM/ SPEC, R, P, OINIT, IANGAC, IAA, IANGVL, IAV,
     * IORVEC, IOV, IEULER, IEU, IYPR, IY, IQUAT, IQ, IPACC, IP
C-----------------------------------------------------------------------
C----Inscrire la date et l'heure
C
      CALL DATE (DATSTR)
      CALL TIME (TIMSTR)
      WRITE(ILOG,709)
      WRITE (ILOG, 710) TIMSTR, DATSTR
      WRITE (ILOG, 711) NREC, NF, NL, ND, DELTIM, R, P, OINIT
      IF (IANGAC .GT. 0) WRITE (ILOG, 741) IAA(1), IAA(3)
      IF (IANGVL .GT. 0) WRITE (ILOG, 742) IAV(1), IAV(3)
      IF (IORVEC .GT. 0) WRITE (ILOG, 743) IOV(1), IOV(3)
      IF (IEULER .GT. 0) WRITE (ILOG, 744) IEU(1), IEU(3)
      IF (IYPR .GT. 0) WRITE (ILOG, 745) IY(1), IY(3)
      IF (IQUAT .GT. 0) WRITE (ILOG, 746) IQ(1), IQ(4)
      IF (IPACC .GT. 0) WRITE (ILOG, 747) IP(1), IP(3)
      WRITE (ILOG,750) NV
C-----------------------------------------------------------------------
C----Les formats
C
709   FORMAT(/,16X,'***** DCIEM Programme pour traiter 9 Accelerometres
     :    *****'/30X,'Version du 9 Juin 1986')
710   FORMAT (/' Analyse du fichier  DEC.OUT',/,
     :     ' Fichier de sortie  AC.OUT',/,
     :     ' Execute a ',8A1,' le ',9A1)
711    FORMAT (//' Nombre d''echantillon = ', I4,
     :       ' : ',I4,' a ',I4,' par ',I4
     :       /' Increment de temps = ',F8.6, ' sec'
     :       /' Longueur des bras :'
     :       /10X'RX1 = ',F10.4,' m',10X'RX3 = ',F10.4,' m'
     :       /10X'RY2 = ',F10.4,' m',10X'RY3 = ',F10.4,' m'
     :       /10X'RZ1 = ',F10.4,' m',10X'RZ2 = ',F10.4,' m'
     :       //' Coordonnees  de l''origine  = ', 3F12.4
     :       /' Orientation init. des vect.= ', 3F12.4/)
```

STANDARDSISO.COM : Click to view the full PDF of ISO 13232-4:2005

© ISO 2005 – All rights reserved

```
887> 741   FORMAT (/' Accelerations  angulaires se retrouveront aux canaux ',
888>     :       I3,' a',I3)
889> 742   FORMAT (' Velocites  angulaires  se  retrouveront  aux  canaux ',
890>     :       I3,' a',I3)
891> 743   FORMAT (' Orientations vectorielles se retrouveront aux canaux ',
892>     :       I3,' a',I3)
893> 744   FORMAT (' Les  modules  d''Euler  se  retrouveront  aux  canaux ',
894>     :       I3,' a',I3)
895> 745   FORMAT (' Yaw,  Pitch,  et  Roll  se  retrouveront  aux canaux ',
896>     :       I3,' a',I3)
897> 746   FORMAT (' Les  Quaternions  se  retrouveront  aux  canaux ',
898>     :       I3,' a',I3)
899> 747   FORMAT (' Accelerations vectorielles se retrouveront aux  can: ',
900>     :       I3,' a',I3)
901> 750   FORMAT (//' Le fichier de sortie contiendra donc ',I3,' canaux.'/)
902> 1     RETURN
903>       END
904>
905>
906>
907>
908>
909> C      COMPUTE EULER ANGLES
910> C
911>       SUBROUTINE EULDEG (D, EUL)
912>       REAL*4 D(3,3), EUL(3)
913> C
914>       DATA RTOD, HALFPI, PI /57.2957795, 1.570796327, 3.141592654/
915> C
916>       IF (D(3,1) .EQ. 0.0 .AND. D(3,2) .EQ. 0.0) GO TO 1
917>       IF (D(1,3) .EQ. 0.0 .AND. D(2,3) .EQ. 0.0) GO TO 1
918> C
919> C      GENERAL CASE
920> C
921>       ALPHA = ATAN2(-D(2,3), D(1,3))
922>       GAMMA = ATAN2(-D(3,2), -D(3,1))
923>       BETA = -ATAN2(SQRT(1 - D(3,3)*D(3,3)), D(3,3))
924>       IF (ABS(BETA) .GT. HALFPI) BETA = BETA - SIGN(PI, BETA)
925>       IF (ABS(GAMMA) .LE. HALFPI) GO TO 2
926>       IF (ABS(ALPHA) .LE. HALFPI) GO TO 2
927>       BETA = SIGN(PI - ABS(BETA), BETA)
928>       ALPHA = ATAN2(D(2,3), -D(1,3))
929>       GAMMA = ATAN2(-D(3,2), D(3,1))
930>       GO TO 2
931> C
932> C      GIMBAL LOCK
933> C
934> 1      ALPHA = ATAN2(-D(2,1), D(2,2))
935>       IF (ALPHA .GT. PI) ALPHA = 2.*PI - ALPHA
936>       IF (ALPHA .LT. -PI) ALPHA = 2.*PI + ALPHA
937>       BETA = 0.
938>       GAMMA = 0.
939> C
940> C      CONVERT TO DEGREES
941> C
942> 2      EUL(1) = RTOD * ALPHA
943>       EUL(2) = RTOD * BETA
944>       EUL(3) = RTOD * GAMMA
945>       RETURN
946>       END
```

STANDARDSISO.COM : Click to view the full PDF of ISO 13232-4:2005

© ISO 2005 – All rights reserved

```
947>
948>
949>
950>
951>
952> C      STORE OUTPUT VARIABLES IN OUTPUT RECORD
953> C
954>       SUBROUTINE FILREC (OUTREC, INDEX, N, VAR)
955> C
956> C      ARGUMENT LIST FOR FILREC:
957> C
958> C           OUTREC IS THE OUTPUT RECORD TO BE FILLED
959> C           INDEX IS THE ARRAY OF VARIABLE INDICES WITHIN OUTREC
960> C           N IS THE NUMBER OF VARIABLES TO BE INSERTED
961> C           VAR IS THE ARRAY OF VALUES
962> C
963>       INTEGER*2 INDEX(1)
964>       REAL*4 OUTREC(22), VAR(1)
965> C
966>       DO 1 I = 1, N
967> 1      OUTREC(INDEX(I)) = VAR(I)
968>       RETURN
969>       END
970>
971>
972>
973>
974>
975>      SUBROUTINE IERMSG(PRGNAM,ICHAR,STRING)
976> C
977> C      Modified by Alain Caron
978> C
979>      BYTE PRGNAM(6), ICHAR, STRING(30)
980> C
981> C     ... begin ...
982>      WRITE (6,7001) PRGNAM, ICHAR, STRING
983>  7001 FORMAT (X,6A1,'-',1A1,'-',30A1)
984>      IF (ICHAR .EQ. 70) STOP  ! fatal error
985> C
986>      RETURN
987>      END
988>
989>
990>
991>
992>
993> C      MATRIX INVERSION
994> C
995>       SUBROUTINE MXINV (A, B, DET)
996> C
997> C      ARGUMENTS FOR MXINV:
998> C
999> C           A IS THE MATRIX TO BE INVERTED
1000> C           B IS THE COMPUTED INVERSE
1001> C           DET IS THE DETERMINANT
1002> C
1003>       REAL*4 A(3,3), B(3,3)
1004> C
1005>       DET = 0.
1006>       DO 1 I = 1, 3
```

STANDARDSISO.COM : Click to view the full PDF of ISO 13232-4:2005

© ISO 2005 – All rights reserved

```
      J = MOD(I, 3) + 1
      K = MOD(J, 3) + 1
      B(I, I) = A(J, J)*A(K, K) - A(J, K)*A(K, J)
      IF (I .EQ. 3) GO TO 1
      DO 2 L = I + 1, 3
      M = 6 - I - L
      B(L, I) = A(L, M)*A(M, I) - A(L, I)*A(M, M)
    2  B(I, L) = A(I, M)*A(M, L) - A(I, L)*A(M, M)
    1  DET = DET + A(1, I)*B(I, 1)
      RETURN
      END


C     COMPUTATION OF THE PHIDOT EQUATION OF MITAL & KING
C
      SUBROUTINE PHIDOT (WDOT, PHI, DPHI, SIGMA)
C
C     ARGUMENTS FOR PHIDOT:
C
C          WDOT IS THE INERTIALLY MEASURABLE ANGULAR VELOCITY
C          PHI IS THE ORIENTATION VECTOR OF MITAL & KING
C          DPHI IS THE CURRENT ESTIMATE OF ITS RATE OF CHANGE
C          SIGMA IS THE NONINERTIALLY MEASURABLE ANGULAR VELOCITY
C
      REAL*4 WDOT(3), PHI(3), DPHI(3), SIGMA(3)
C
      PHISQR = PHI(1)*PHI(1) + PHI(2)*PHI(2) + PHI(3)*PHI(3)
      IF (PHISQR .GT. 0.0001) GO TO 1
C
C     APPROXIMATION FOR SMALL PHI
C
      CA = (1.0 + PHISQR/30.0 + PHISQR*PHISQR/840.0)/3.0
      CB = (1.0 + PHISQR/60.0 + PHISQR*PHISQR/2520.0)/6.0
      GO TO 2
C
C     RIGOROUS EXPRESSION
C
    1  PHIMAG = SQRT(PHISQR)
      A = 1.0 - COS(PHIMAG)
      B = 1.0 - SIN(PHIMAG)/PHIMAG
      CA = B/A
      CB = (2.0 - PHIMAG*SIN(PHIMAG)/A)/PHISQR
C
C     CALCULATION OF NONINERTIAL MOTION
C
    2  DO 3 I = 1, 3
      J = MOD(I, 3) + 1
      K = MOD(J, 3) + 1
    3  SIGMA(I) = PHI(J)*(CA*WDOT(K) + CB*DPHI(K))
     * - PHI(K)*(CA*WDOT(J) + CB*DPHI(J))
      RETURN
      END
```

STANDARDSISO.COM : Click to view the full PDF of ISO 13232-4:2005

© ISO 2005 – All rights reserved

```
1067> C      COMPUTE QUATERNIONS FROM TRANSFORMATION MATRIX
1068> C
1069>        SUBROUTINE QUATER (D, QC, RC)
1070>        REAL*4 D(3,3), QC(4), RC(4)
1071> C
1072>        DATA RTOD /57.2957795/
1073> C
1074>        DTRACE = D(1,1) + D(2,2) + D(3,3)
1075>        XR = 0.25*(DTRACE + 1.)
1076>        CTH = 0.5*(DTRACE - 1.)
1077>        RC(4) = ATAN2(SQRT(1. - CTH*CTH), CTH) * RTOD
1078>   QC(4) = SQRT(XR)
1079>        A = 4.*QC(4)
1080>        QC(1) = (D(2,3) - D(3,2)) / A
1081>        QC(2) = (D(3,1) - D(1,3)) / A
1082>        QC(3) = (D(1,2) - D(2,1)) / A
1083>        ES = SQRT(1. - XR)
1084>        DO 1 I = 1, 3
1085>        RC(I) = 0.
1086>        IF (ES .GT. .005) RC(I) = QC(I) / ES
1087> 1      CONTINUE
1088>        RETURN
1089>        END
1090>
1091>
1092>
1093>
1094>
1095> C      RUNGE-KUTTA FOURTH ORDER INTEGRATION OF ANGULAR VELOCITIES
1096> C
1097>        SUBROUTINE RK (PHI, AV1, AV2, AV3, K4, HDT)
1098> C
1099> C      ARGUMENT LIST FOR RK:
1100> C
1101> C            PHI IS THE ORIENTATION VECTOR OF MITAL & KING
1102> C            AV1, AV2, AV3 ARE CONSECUTIVE ANGULAR 7VELOCITY VECTORS
1103> C            K4 IS AN ESTIMATE OF D(PHI)/DT
1104> C            HDT IS THE TIME INCREMENT BETWEEN RECORDS
1105> C
1106>        REAL*4 PHI(3), AV1(3), AV2(3), AV3(3)
1107>        REAL*4 K1(3), K2(3), K3(3), K4(3), S(3), TPHI(3)
1108> C
1109>        DT = 2. * HDT
1110> C
1111>        CALL PHIDOT (AV1, PHI, K4, S)
1112>        DO 1 I = 1, 3
1113> 1      K1(I) = AV1(I) + S(I)
1114> C
1115>        CALL PHIDOT (AV1, PHI, K1, S)
1116>        DO 2 I = 1, 3
1117>        K1(I) = AV1(I) + S(I)
1118> 2      TPHI(I) = PHI(I) + HDT * K1(I)
1119> C
1120>        CALL PHIDOT (AV2, TPHI, K1, S)
1121>        DO 3 I = 1, 3
1122>        K2(I) = AV2(I) + S(I)
1123> 3      TPHI(I) = PHI(I) + HDT * K2(I)
1124> C
1125>        CALL PHIDOT (AV2, TPHI, K2, S)
1126>        DO 4 I = 1, 3
```

STANDARDSISO.COM : Click to view the full PDF of ISO 13232-4:2005

© ISO 2005 – All rights reserved

```
      K3(I) = AV2(I) + S(I)
 4     TPHI(I) = PHI(I) + DT * K3(I)
C
      CALL PHIDOT (AV3, TPHI, K3, S)
      DO 5 I = 1, 3
      K4(I) = AV3(I) + S(I)
 5     PHI(I) = PHI(I) + DT*(K1(I) + 2.*(K2(I) + K3(I)) + K4(I))/6.
C
      RETURN
      END



C     IDENTIFY OUTPUT VARIABLES
C
      SUBROUTINE SETREC (ISPEC, IVAR, INDEX, N, NVARS)
C
C     ARGUMENT LIST FOR SETREC:
C
C          ISPEC IS THE VARIABLE COUNT FOR OUTPUT RECORD 1
C          IVAR IS 1 OR 0 ACCORDING AS THE VARIABLE SET IS USED
C          INDEX IS THE LIST OF VARIABLE NUMBERS TO BE SET
C          N IS THE NUMBER OF SUCH VARIABLES
C          NVARS IS THE TOTAL NUMBER OF VARIABLES RECORDED
C
      INTEGER*2 INDEX(1)
C
C     SET IVAR TO NUMBER OF ASSOCIATED VARIABLES
C
      ISPEC = 0
C
C     RETURN IF VARIABLES NOT REQUESTED
C
      IF (IVAR .LE. 0) RETURN
      ISPEC = N
      DO 1 I = 1, N
C
C     SET VARIABLE NUMBERS
C
 1     INDEX(I) = NVARS + I
C
C     UPDATE NUMBER OF VARIABLES
C
      NVARS = NVARS + N
      RETURN
      END



C     UPDATE THE D MATRIX
C
      SUBROUTINE UPDATE (PHI, CRB, DERIV, D1, D, QC, RC)
C
C     ARGUMENTS FOR UPDATE:
C
C          PHI IS THE ORIENTATION VECTOR
```

STANDARDSISO.COM : Click to view the full PDF of ISO 13232-4:2005

© ISO 2005 – All rights reserved

```
1187> C           CRB IS THE TRANSFORMATION MATRIX
1188> C           DERIV IS AN ESTIMATE OF THE RATE OF CHNAGE OF PHI
1189> C           D1 IS THE CURRENT D MATRIX
1190> C           D IS THE NEW D MATRIX
1191> C           QC AND RC ARE ESTIMATES OF THE QUATERNION VECTOR
1192> C
1193>       INTEGER*2 SPEC(39), IAA(3), IAV(3), IOV(3), IEU(3)
1194>       INTEGER*2 IY(3), IQ(4), IP(3)
1195>       REAL*4 PHI(3), CRB(3,3), DERIV(3), D1(3,3), D(3,3)
1196>       REAL*4 QC(4), RC(4), TEMP(3,3), R(6), P(3), OINIT(3)
1197> C
1198>       COMMON /PARAM/ SPEC, R, P, OINIT, IANGAC, IAA,
1199>      * IANGVL, IAV, IORVEC, IOV, IEULER, IEU,
1200>      * IYPR, IY, IQUAT, IQ, IPACC, IP
1201> C
1202>       DATA PHIMAX /0.7854/
1203>       DATA EPS6, EPS15 /1.E-6, 1.E-15/
1204> C
1205>       CALL QUATER (CRB, QC, RC)
1206> C
1207> C      GET NEW D = CRB * D1
1208> C
1209>       DO 1 I = 1, 3
1210>       DO 1 J = 1, 3
1211>       D(I, J) = 0.
1212>       DO 1 K = 1, 3
1213> 1      D(I, J) = D(I, J) + CRB(I, K) * D1(K, J)
1214> C
1215> C      NORMALIZE D MATRIX
1216> C
1217>       DO 2 ITER = 1, 10
1218>       CALL MXINV (D, TEMP, DET)
1219>       DO 3 I = 1, 3
1220>       DO 3 J = 1, 3
1221>       D(I, J) = 0.5*(D(I, J) + TEMP(J, I)/DET)
1222> 3      IF (ABS(D(I, J)) .LT. EPS15) D(I, J) = 0.
1223>       IF (ABS(DET - 1.) .LT. EPS6) GO TO 5
1224> 2      CONTINUE
1225>       WRITE (6, 600) DET
1226> 600     FORMAT (/' NORMALIZATION OF D FAILED - DET =',F10.5)
1227> 5      CALL QUATER (D, QC, RC)
1228> C
1229> C      TEST PHI FOR UPDATING
1230> C
1231>       PHIP = SQRT(PHI(1)*PHI(1) + PHI(2)*PHI(2) + PHI(3)*PHI(3))
1232>       IF (PHIP .LE. PHIMAX) RETURN
1233> C
1234> C      UPDATE IF NEEDED
1235> C
1236>       DO 4 I = 1, 3
1237>       DERIV(I) = 0.
1238>       OINIT(I) = OINIT(I) + PHI(I)
1239>       PHI(I) = 0.
1240>       DO 4 J = 1, 3
1241> 4      D1(I, J) = D(I, J)
1242>       RETURN
1243>       END
1244>
1245>
1246>
```

STANDARDSISO.COM : Click to view the full PDF of ISO 13232-4:2005

© ISO 2005 – All rights reserved

```
1247>
1248>
1249> C      COMPUTE YAW, PITCH, AND ROLL
1250> C
1251>       SUBROUTINE YPRDEG (D, YPR)
1252>       REAL*4 D(3,3), YPR(3)
1253> C
1254>       DATA RTOD, HALFPI, PI /57.2957795, 1.570796327, 3.141592654/
1255> C
1256>       IF (D(1,1) .EQ. 0.0 .AND. D(1,2) .EQ. 0.0) GO TO 6
1257>       IF (D(2,3) .EQ. 0.0 .AND. D(3,3) .EQ. 0.0) GO TO 6
1258>       YAW = ATAN2(D(1,2), D(1,1))
1259>       ROLL = ATAN2(D(2,3), D(3,3))
1260>       GO TO 7
1261> 6      YAW = ATAN2(-D(2,1), D(2,2))
1262>       ROLL = 0.
1263> 7      PITCH = ATAN2(-D(1,3), SQRT(1. - D(1,3)*D(1,3)))
1264>       IF (ABS(ROLL) .LE. HALFPI) GO TO 8
1265>       IF (ABS(YAW) .LE. HALFPI) GO TO 8
1266>       PITCH = SIGN(PI - ABS(PITCH), PITCH)
1267>       YAW = ATAN2(-D(1,2), -D(1,1))
1268>       ROLL = ATAN2(-D(2,3), -D(3,3))
1269> 8      YPR(1) = RTOD * YAW
1270>   YPR(2) = RTOD * PITCH
1271>       YPR(3) = RTOD * ROLL
1272>       RETURN
1273>       END
1274>
1275>
1276>
1277>
1278>
1279> c...+....1....+....2....+....3....+....4....+....5....+....6....+....7....+....8
1280> c
1281> c  vax library routines
1282> c
1283> c     routine   volume   section   page
1284> c     assign     1      E.3.1     E-8
1285> c     close      1      E.3.2     E-9
1286> c     Errset     1      E.3.3     E-9
1287> c     Errtst     1      E.3.4     E-10
1288> c     fdbset     1      E.3.5     E-11
1289> c     date       2      D.4.1     D-45
1290> c     time       2      D.4.6     D-48
1291> c
1292> c...+....1....+....2....+....3....+....4....+....5....+....6....+....7....+....8
1293>
1294>       subroutine assign(n,name,icnt)
1295>       integer n, icnt
1296>       character*(*) name
1297>
1298>       write(0,*) 'assign',n,name(1:icnt)
1299>       open(n,file=name(1:icnt))
1300>
1301>       return
1302>
1303>       end
1304>
1305> c...+....1....+....2....+....3....+....4....+....5....+....6....+....7....+....8
1306>
```

STANDARDSISO.COM : Click to view the full PDF of ISO 13232-4:2005

© ISO 2005 – All rights reserved

```
      subroutine close(n)
      integer n
c
      write(0,*) 'close',n
      close(n)
c
      return
c
      end
c...+....1....+....2....+....3....+....4....+....5....+....6....+....7....+....8
c
      subroutine errset(number, contin, count, type, log, maxlim)
      integer number, maxlim
      logical contin, count, type, log
c
c     This subroutine determines the action taken when errors are
c     detected.  See
c
c     the arguments are as follows:
c
c       argument   i/o   description
c       --------   ---   -----------
c       number      i    error number
c       contin      i    .true.=continue after error is detected,
c                        otherwise exit
c       count       i    .true.=count the error against the maximum
c                        error limit
c       type        i    .true.=pass control to an ERR transfer label
c                        if specified,
c                        otherwise default error recovery
c       log         i    .true.=produce error message
c       maxlim      i    maximum error limit
c
      write(0,*) 'errset',number,contin,count,type,log,maxlim
c
      return
c
      end
c...+....1....+....2....+....3....+....4....+....5....+....6....+....7....+....8
c
      subroutine errtst(i,j)
      integer i, j
c
      write(0,*) 'errtst',i,j
      j = 2
c
      return
c
      end
c...+....1....+....2....+....3....+....4....+....5....+....6....+....7....+....8
c
      subroutine fdbset(unit,acc,share,numbuf,initsz,extend)
      integer unit, numbuf, initsz, extend
      character*(*) acc, share
c
      write(0,*) 'fdbset',unit,acc,share,numbuf,initsz,extend
c
```

STANDARDSISO.COM : Click to view the full PDF of ISO 13232-4:2005

© ISO 2005 – All rights reserved

```
1367>       return
1368>
1369>       end
1370>
1371> c...+....1....+....2....+....3....+....4....+....5....+....6....+....7....+....8
1372>
1373>       subroutine date(buff)
1374>       character*(9) buff
1375> c
1376> c     return date
1377> c
1378>       buff = 'dd-mmm-yy'
1379>
1380>       end
1381>
1382> c...+....1....+....2....+....3....+....4....+....5....+....6....+....7....+....8
1383>
1384>       subroutine time(buff)
1385>       character*(8) buff
1386> c
1387> c     return time
1388> c
1389>       buff = 'hh:mm:ss'
1390>
1391>       end
1392>
1393> c...+....1....+....2....+....3....+....4....+....5....+....6....+....7....+....8
1394> c...+....1....+....2....+....3....+....4....+....5....+....6....+....7....+....8
1395>
1396>       subroutine clrlin(i,j)
1397>       integer i,j
1398> c
1399> c     clear display lines i through j
1400> c
1401>       return
1402>
1403>       end
1404>
1405> c...+....1....+....2....+....3....+....4....+....5....+....6....+....7....+....8
1406>
1407>       subroutine delais(deltim)
1408>       real deltim
1409> c
1410> c     wait 'deltim' seconds
1411> c
1412>       return
1413>
1414>       end
1415>
1416> c...+....1....+....2....+....3....+....4....+....5....+....6....+....7....+....8
1417>
1418>       subroutine key(inkey)
1419>       integer inkey
1420> c
1421> c     request key board character
1422> c
1423>       character*1 ch
1424>
1425>       read(0,101) ch
1426>       inkey = ichar(ch)
```

STANDARDSISO.COM : Click to view the full PDF of ISO 13232-4:2005

© ISO 2005 – All rights reserved

```
1427>
1428>      return
1429>
1430>   101 format(a1)
1431>
1432>      end
1433>
1434> c...+....1....+....2....+....3....+....4....+....5....+....6....+....7....+....8
1435>
1436>      subroutine locate(row,col,text)
1437>      integer row,col
1438>      character*(*) text
1439> c
1440> c     write out 'text' at row and col position on screen
1441> c
1442>      return
1443>
1444>      end
1445>
1446> c...+....1....+....2....+....3....+....4....+....5....+....6....+....7....+....8
```

STANDARDSISO.COM : Click to view the full PDF of ISO 13232-4:2005

© ISO 2005 – All rights reserved

Annex D
(informative)

Rationale for ISO 13232-4

All references cited in Annex D are listed in Annex B of ISO 13232-1.

D.1 Specific portion of the Scope

The goal of this part of ISO 13232 is to provide measurement procedures and apparatus which give repeatable measurements within a test facility and reproducible measurements across test facilities. This means that, ideally, for a given impact event, repeated measurements (e.g., reanalysis of a high speed film) would yield the same results, and all laboratories would get the same results. This applies to all aspects of the measurement process, including sensor specification, calibration, recording means, camera positioning, etc.

"Dummy instrumentation" refers to the use of specific apparatus (e.g., sensors) which are physically, inertially, geometrically, and dynamically compatible with the specialized MC dummy described in ISO 13232-3, and with the expected MC impact conditions, e.g., unrestrained motions, high accelerations, and forces, etc. It also refers to, for example, the goal of not artificially distorting the motion of the MC dummy by the use of external cables; or for example, inclusion of means for electronically monitoring the forces in the frangible leg bones.

D.2 Requirements (see 4)

D.2.1 Electronically recorded variables (see 4.1)

D.2.1.1 Required (see 4.1.1)

D.2.1.1.1 Nine linear accelerometers are used to measure head linear and angular accelerations, according to the method developed by Padgaonkar et al., (1975). This involves a triaxial central sensor and three biaxial sensors aligned with each of the triaxial axes.

The nine variables from the sensors are arithmetically combined to produce three linear accelerations and three angular accelerations as described in Annex C. The six components are then combined to calculate the brain injury index as described in ISO 13232-5.

D.2.1.1.2 Chest mid-sternum displacement relative to the thoracic spine box is recorded to enable calculation of chest compression and chest compression velocity as defined in ISO 13232-5. Left and right triangulated displacements are sensed as shown in Figure 3. This has several advantages. First, it enables installation of the frangible abdominal insert which would normally interfere with the location of the standard Hybrid III rotational potentiometer in the lower thorax. Second, placing the potentiometers on either side of the spine box allows for full travel of the sternum plate. Third, the use of separate left and right measurements allows for later analysis of asymmetric sternum displacement, although this effect is not currently included in the chest injury indices.

D.2.1.1.3 The measurement of upper and lower displacements allows the worst values from the two injury sites to be used in calculating injury costs (see ISO 13232-5).

D.2.1.1.4 Six neck forces and moments are recorded to enable evaluation of upper neck injuries as defined in ISO 13232-5. The forces and moments are sensed in the region of the atlanto-occipital juncture.

D.2.1.1.5 Three upper femur forces and moments are recorded for each leg for leg protective device evaluation. These are not directly used in injury prediction but are used to help trace sources of frangible leg damage. The lateral and antero-posterior bending moments are recorded because these are the primary likely axes of femur

STANDARDSISO.COM : Click to view the full PDF of ISO 13232-4:2005

© ISO 2005 – All rights reserved

failure based on past tests and clinical data. The axial force is also recorded because this can contribute to potential bending failure, via the hip joint eccentricity. Shear forces are not required variables because these are less common axes of failure for the upper leg. Also, torsion moment is not required because the femur tends to be isolated in torsion by the hip ball joint and varus degree of freedom at the knee.

Two upper tibia bending moments are recorded for each leg for leg protective device evaluation and, as with the upper femur variables, are used primarily to trace sources of potential bone fracture rather than as an injury index. The lateral and antero-posterior bending moments are recorded because these are the primary likely axes of tibia failure. Additional tibia and femur forces and moments may be recorded as permissible variables, as described below.

D.2.1.2 Not recommended (see 4.1.2)

It is recommended that chest acceleration not be recorded in motorcycle impact research tests, because for distributed, three dimensional impacts, these measurements are potentially misleading and could result in erroneous conclusions. Existing chest acceleration criteria evolved from early studies of dynamic effects on injuries. Tolerance to deceleration was found to increase with decreased exposure. Chest acceleration criteria assume that the thorax acts as a rigid body subjected to whole body decelerations. The limitations associated with the application of this criterion and associated measurements include: a lack of sensitivity to impact location, i.e., accelerations registered in the thorax cannot be isolated from load paths through the knees, legs, pelvis, hips, shoulders and head; dynamic force amplification due to rigid impacts to the exposed rigid Hybrid III shoulder; the inability to account for the effect of chest deformation on injury causation; and the sensitivity of the criterion to the impact test set up.

Likewise, measurement and recording of pelvic accelerations are considered to be potentially misleading in the case of motorcycle impacts, and therefore, are not recommended. Early pelvic acceleration criteria were based on whole body motion concepts. They did not consider rigid impacts to the ischia and other pelvic structures to which motorcycle riders may be exposed; nor did they consider the gross differences in stiffness between the human pelvis and the cast aluminum Hybrid III pelvis. The human pelvis is relatively flexible, with the deflection at fracture being as much as 50 mm in some regions. The Hybrid III pelvis, on the other hand, is essentially rigid, and this results in dynamic force amplification (compared to forces on cadavers) when it is contacted by other rigid structures not typically found in car frontal impacts, but quite common in motorcycle multi-directional crashes. This force amplification is potentially misleading, and could result in erroneous conclusions.

D.2.1.3 Permissible (see 4.1.3)

The permissible variables are, in general, those variables for which injury criteria were not available at the time of the writing of ISO 13232, and/or which may supplement the required variables for purposes of tracing potential injury sources. They include: the six axes of lumbar forces and moments; and the forces and moments acting on the femur and tibia, which may be useful, for example, for tracing the sources of leg fractures.

In general, the lower femur and lower tibia variables are permissible rather than required because they are in the frangible region of the respective bones. This requires the use of strain gauges which are destroyed in the fracture event. The upper tibia sensors are also in the frangible region, but are required for leg protective device evaluation because they give some indication of loads occurring at the knee and also at the upper tibia.

D.2.2 Mechanically recorded variables (see 4.2)

As described elsewhere (for example, in the rationales for ISO 13232-3 and ISO 13232-5), because of the wide distribution of potential injuries to these body regions and the nature of the related body structures, there are currently no practical means for electronically sensing abdomen, femur, knee, and tibia injury variables over wide areas (for example, along the length and around the circumference of the tibia). The alternative used here is to model the body structures directly; to incorporate mechanical biofidelity up to and including failure; and then to record the failures (i.e., deformation or fracture occurrence) as direct measures of injury potential.

STANDARDSISO.COM : Click to view the full PDF of ISO 13232-4:2005

© ISO 2005 – All rights reserved

D.2.3 Photographic targets to be digitized (see 4.3)

Targets are to be digitized at first MC/OV contact for the OV and top, rear, and front MC targets in order to enable measurement and verification of the impact conditions, the tolerances for which are described in ISO 13232-6.

D.2.3.1 Helmet centroid point (see 4.3.1)

The helmet centroid point is needed to measure helmet trajectory and helmet velocity at contact with the OV, which are the two injury potential variables described in ISO 13232-5.

D.2.3.2 Motorcycle (see 4.3.2)

The motorcycle top, and rear, or front view centre lines are needed to measure initial motorcycle roll and relative heading angle. The main frame front or rear reference targets are needed for a time history in order to calculate MC speed just before impact.

D.2.3.3 Opposing vehicle (see 4.3.3)

The OV bonnet, roof, and boot lid centre lines are needed in order to measure and calculate the relative heading angle and the initial OV contact point. The body side reference time history is needed in order to calculate OV speed just prior to impact.

D.2.3.4 Ground (see 4.3.4)

The ground targets are used as references for vehicle target locations, during film analysis.

The vertically aligned targets visible in the MC rear view or MC front view provide a vertical reference line which is used to determine the MC roll angle at first MC/OV contact.

D.2.3.5 Dummy (see 4.3.5)

The dummy joint target locations are needed to verify that the dummy has not shifted from its standard seating position prior to MC/OV impact.

D.2.4 Sensor specifications (see 4.4)

D.2.4.1 Head accelerometers (see 4.4.1.1)

The specified accelerometers are compatible with the defined accelerometer mount and with the interior space, measurement range, durability, and accuracy requirements of the specified head form. The specified accelerometer mount is compatible with the space limitations of the Hybrid III head form. The spacing and alignment of the nine accelerometers need to be standardized to ensure that the same angular accelerations and similar signal-to-noise ratios are measured for the same inputs, at all test facilities. The spacing and skewed alignment with respect to the head axes give minimum cross axis sensitivity across the full range of angular motions encountered.

D.2.4.2 Upper neck load cell (see 4.4.1.2)

The specified sensor is compatible with the special Hybrid III head form and upper neck mounts (see ISO 13232-3) and with the accuracy, ruggedness, range, and cross axis sensitivity requirements of the Hybrid III dummy.

D.2.4.3 Chest potentiometers (see 4.4.1.3)

The standard Hybrid III rotary chest displacement transducer has been replaced by a chest deflection instrumentation assembly, shown in Figure 3. This assembly consists of four string potentiometers, an upper one and a lower one, on either side of the thoracic spine box of the dummy. The use of this array is compatible with the provision of the load sensing abdomen, as the mounting brackets for the frangible abdominal insert preclude the use of the standard Hybrid III displacement transducer.

STANDARDSISO.COM : Click to view the full PDF of ISO 13232-4:2005

© ISO 2005 – All rights reserved

The string potentiometers are Space Age Control, Inc. 160-321V units which are specially modified for use in measuring rib deflection in frontal impact testing and have a maximum response rate of 1,5 m/s ± 0,5 m/s at a tension of 15,6 N. In this application this rating is further increased by the angled mounting of the potentiometer strings. As a result, a sternal velocity of up to 13,5 m/s (which is equivalent to a chest impact velocity of 50 km/h) is able to be measured.

Chest impact tests at an impact speed of approximately 3 m/s were conducted with both string pots and the original rotary pot installed in the chest of MATD. The results are shown in Figure D.1. The curves show that there is no apparent phase difference in the response of the string pots as compared to the rotary pot.

D.2.4.4 Lumbar load cell (see 4.4.1.4)

The specified sensor is compatible with the special straight lumbar spine assembly and with the accuracy, range, ruggedness, and cross axis sensitivity requirements of the Hybrid III dummy.

D.2.4.5 Upper femur load cells (see 4.4.1.5)

The specified sensor is specially designed for the motorcyclist dummy and has a much smaller outer diameter than the standard Hybrid III upper femur load cell. This is to help reduce rigid/rigid interaction with impacting structures and the resulting force magnification that may occur. Such magnification due to direct sensor impact may still occur, but it is less severe than with the standard load cell. Otherwise, the specified load cell is compatible with the geometry, accuracy, range, ruggedness, and cross axis sensitivity requirements of the frangible femur bones and Hybrid III leg components.

D.2.4.6 Frangible leg bone strain gauges (see 4.4.1.6)

The locations for the femur and tibia strain gauges are specified in order that comparable measurements will be made by different test facilities. The specific gauge and installation details are also specified because these will influence the accuracy, drift, and comparability of measurements made at different test facilities. The specifications lie within what is considered common strain gauge practice.

D.2.4.7 Mechanical (see 4.4.2)

These four sensors are needed in order to measure the injury variables for these four body regions.

D.2.5 Internal data acquisition and recording system specifications (see 4.5)

An internal data acquisition system is recommended in order to prevent distortion of dummy motions which can be caused by external electrical cables. Past test experience indicates that such cables can influence test results by: applying forces (due to cable inertia, or to catching on other objects) to the dummy which may vary in amplitude and direction; impacting the dummy itself, during various phases of the crash test; wrapping around various dummy appendages; increasing the likelihood of data dropouts due to connector disruption; or obstructing photographic camera views and film data acquisition. Long cables (e.g., 30 m) typically require special impedance matching. Internal data acquisition systems are feasible and available for this type of application and a 32-channel unit has been used in motorcycle crash tests.

D.2.5.1 Not recommended external cables (see 4.5.1)

The use of external cables is not recommended because they can distort dummy kinematics due to cable inertial effects, impacts with the dummy, or tension effects. Currently, there is no method available to guarantee such effects will not occur. The tension effect is illustrated by ATB computer simulations of configuration 143 with a 13,4 m/s OV impacting a stationary motorcycle. The model used an ATB harness model to connect the rear of the dummy's pelvis to the right rear portion of the motorcycle seat to determine the effects of one or more cables catching on some part of the motorcycle. The stiffness and strength of these cables were determined from laboratory measurements of a cable that meets the requirements of 4.5.1 (Figure D.2). However, it should be noted

STANDARDSISO.COM : Click to view the full PDF of ISO 13232-4:2005

© ISO 2005 – All rights reserved

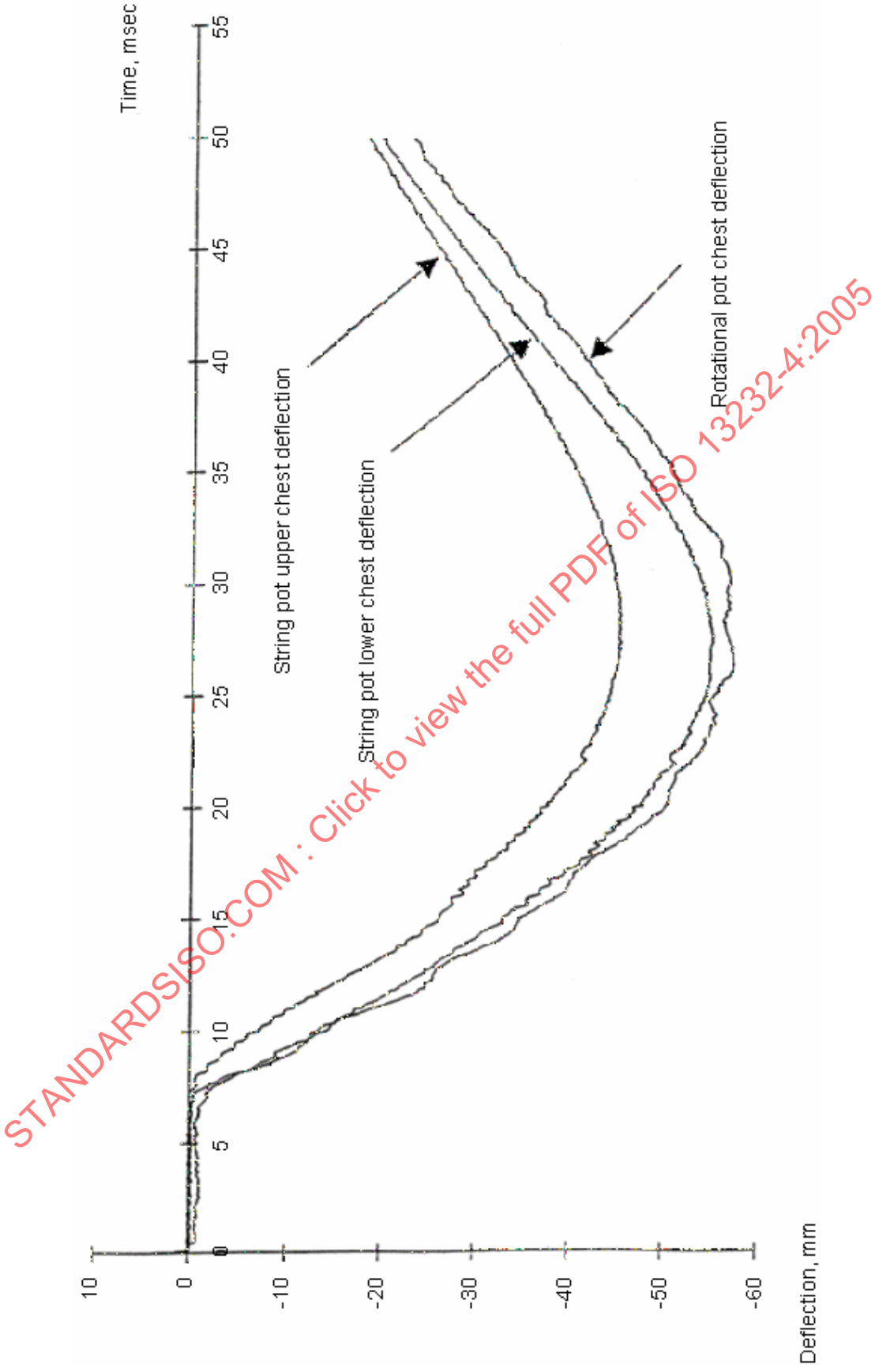

STANDARDSISO.COM : Click to view the full PDF of ISO 13232-4:2005

Figure D.1 — Rotational chest pot and string pot time history responses to impact when mounted in the Hybrid III chest

© ISO 2005 – All rights reserved

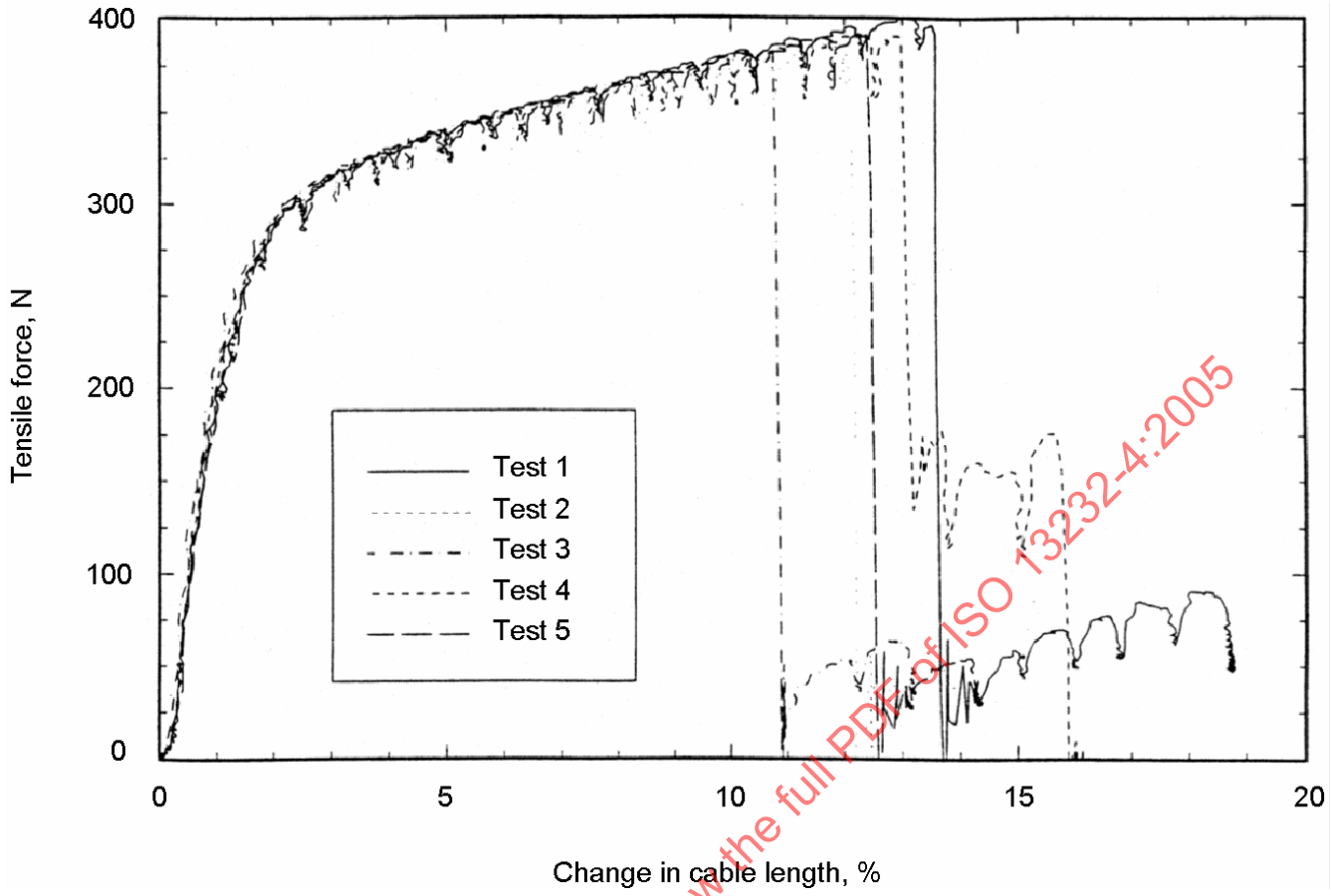

Figure D.2 — Force/deflection properties of example cables

that maximum cable strength is not specified in 4.5.1, and the strength could be much greater (and the motion distortion much worse) than that used here (approximately 400 N).

Figures D.3 through D.7 show the effects of one cable catching and breaking. Only slight distortion of the motion occurs with this particular cable breaking strength. Figures D.8 through D.12 show the effects of 12 cables catching and deforming. In this case, the cables are stretched and undergo plastic deformation, but do not break. The dummy motion is greatly affected. Catching of more than one cable or use of stronger cables would also be expected to distort the motion. Such distortions due to cable effects are not biofidelic, and can lead to variations between tests, and among test facilities.

Temporary self-detaching cables to supply initial power and the signal from the initial MC/OV contact sensor are permissible providing that they detach at a maximum force of 5 N. From experience with the feasible design, this detachment occurs in the initial impact period and is of insufficient magnitude to significantly affect dummy motion.

The rear portion of the pelvis is the customary attachment location for the Hybrid III dummy. Also it is near the centre of gravity of the total dummy, and therefore, should help to minimize the distortion of limb or torso motion. Use of an attached connector for strain relief is considered to be good standard practice.

The use of nondetachable external cables according to the technical specification which is provided in 4.5.1, though not recommended, in some cases may not significantly affect dummy motion. This was demonstrated at the Transport Research Laboratory (TRL) by the results of practical experiment. A series of five tests using an U.K. Standard Occupant Protection Assessment Test Dummy (OPAT) dummy in free flight, i.e., no external cables, was undertaken on an indoor impact rig. The dummy was mounted on a Norton motorcycle adapted so that it could be fitted to the impact rig sled; this was then accelerated to a velocity of 13,4 m/s before being brought to rest by an acceleration pulse of approximately -20 m/s^2. The pulse was determined by experiment whereby the acceleration time history of the sled, which is controlled by the deformation of crumple tubes, was matched approximately to that of an equivalent full-scale test of an impact of a Norton motorcycle and OPAT dummy at a relative heading angle of

STANDARDSISO.COM : Click to view the full PDF of ISO 13232-4:2005

© ISO 2005 – All rights reserved